CYCLOIDAL PIN WHEEL PRECISION REDUCER

摆线针轮精密减速器

中大力德

中大 实现自动化应用的无限可能

Zhongda Realizes the infinite possibility in automation application

宁波中大力德智能传动股份有限公司始创于1998年，是一家集电机驱动、微特电机、精密减速器、机器人结构本体及一体化智能执行单元的研发、制造、销售、服务于一体的国家高新技术企业。公司注册资本10400万元，分、子公司9家，员工1800余人，2017年8月在深交所主板上市，股票代码：002896。

公司系国家级高新技术企业，主导和参与起草国家标准10项，行业标准5项；授权专利107项，其中发明专利11项。拥有机械工业精密齿轮减速电机工程研究中心、浙江省级高新技术企业研究开发中心、浙江省级企业技术中心。

公司立足于智能化、自动化装备核心零部件设计和制造，为客户提供智能驱动解决方案。公司产品以其差异化和高性价比优势，广泛应用于工作母机、数控设备、工业机器人、智能物流、新能源、食品、包装、纺织、电子、医疗、通讯、农牧等机械装备领域。在替代进口产品的基础上，逐步参与国际竞争。

Ningbo Zhongda Leader Intelligent Transmission Co., Ltd. was founded in 1998. It is an electromechanical automation enterprise integrating R&D, manufacturing, sales and service of motor drives, micro motors, precision reducers and integrated products. It has 9 branches and subsidiaries, over 1,800 employees, and a registered capital of 104 million yuan. In August 2017, it was listed on the A-shares of the Shenzhen Stock Exchange (stock code 002896).

The company is a national-level high-tech enterprise, leading and participating in the drafting of 10 national standards and 5 industry standards, maintaining 107 patents and 11 invention patents. It’s owning a Zhejiang-level enterprise R&D center.

The company is based on intelligent and automation equipment core component manufacturers and design solution providers. With its differentiated and cost-effective advantages, the company's products are widely used in industrial robots, intelligent logistics, new energy, machine tools and other fields, as well as special machinery and equipment for food, packaging, textiles, electronics, and medical treatment. On the basis of realizing domestic substitution of imported products, gradually participate in international competition.nd medical treatment. On the basis of realizing domestic substitution of imported products, gradually participate in international competition.

术语和定义
TERMS AND DEFINITIONS

GB/T10107.1摆线针轮行星传动基本术语和JB/T10419摆线针轮行星传动、摆线齿轮和针轮、精度中确定的和下列术语和定义适用于本标准。

GB/T10107.1 the basic planetary transmission terms of cycloidal-pin wheel and JB/T10419 cycloidal-pin wheel planetary transmission, cycloid gear, pin wheel, and accuracy terms all suitable for this standard.

迟滞曲线 Hysteresis Curve

固定输入齿轮，向输出端施加转矩，得到转矩同扭转角的对应关系，绘出迟滞曲线。(图1)

The fixed input gear is applied to the output to obtain the corresponding relationship between the torque and the torsion angle, and the hysteresis curve is drawn. (Figure 1)

传动精度 Transmission Accuracy

传动精度(θ): 指输入任意旋转角时的理论旋转角度(θin)和实际输出旋转角度(θout)之间的差，公式表示: θ=θin/k-θout (k---速比值)。

Transmission accuracy (θ): refers to the input with arbitrary rotation angle when the theory of rotation angle (θin) and the actual output rotation angle (θout) between poor and formula: θ=θin/k-θout (k---Ratio values).

回差（空程） Empty trip

指在额定转矩的±3%处的迟滞曲线宽度的中间点的扭转角。(图1)

The intermediate point of the hysteresis curve of the nominal torque of 3%. (Figure 1)

齿隙 Backlash

指在额定转矩为 "零" 处的扭转角。(图1)

Torsion angle at the rated torque of zero. (Figure 1)

扭转刚度 Torsional Stiffness

单位 Unit: (Nm/arc min)

扭转刚度 = B/A。(图1)

Torsional stiffness = B/A. (Figure 1)

● **图1—迟滞曲线** Figure 1 — Hysteresis curve

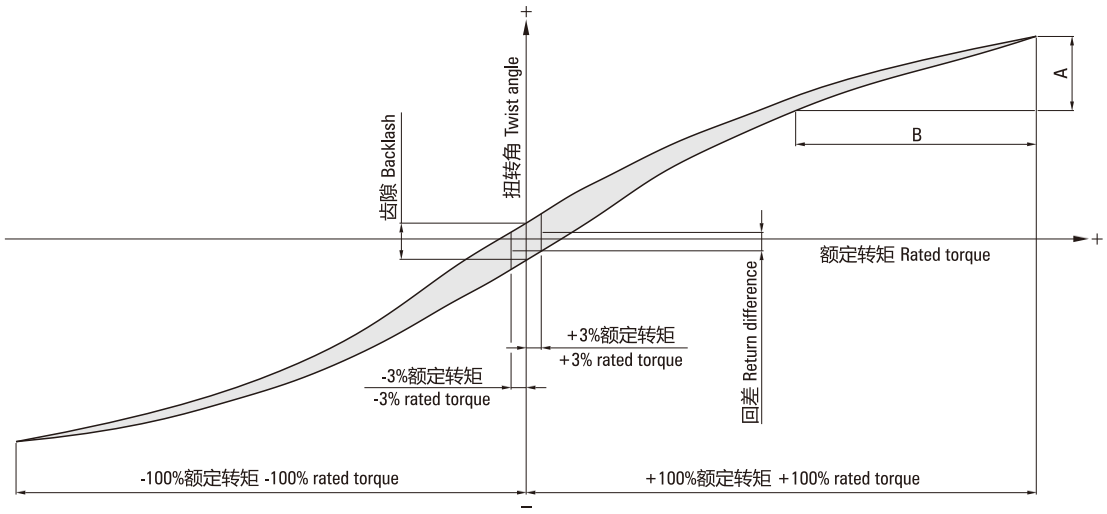

术语和定义
TERMS AND DEFINITIONS

弯曲刚度（力矩刚性）Moment Rigidity

受到外部负载弯矩时，输出轴与负载弯矩成正比倾斜，产生θ角 N.m / (Arc.min)。

When subjected to an external load moment, the output shaft is tilted in proportion to the load moment, resulting in an angle θ N.m / (Arc.min).

θ=(W1/1+W2/3) / (Mt X 103)　Mt即为弯曲刚度（如图所示）。Mt is the bending stiffness (As shown).

弯曲刚度表示主轴承的刚度，用倾斜单位角度 (1arc.min) 所需要的载荷转矩值来表示。

Bending stiffness represents the stiffness of the main bearing, expressed in terms of the load torque required for a unit angle of inclination (1arc.min).

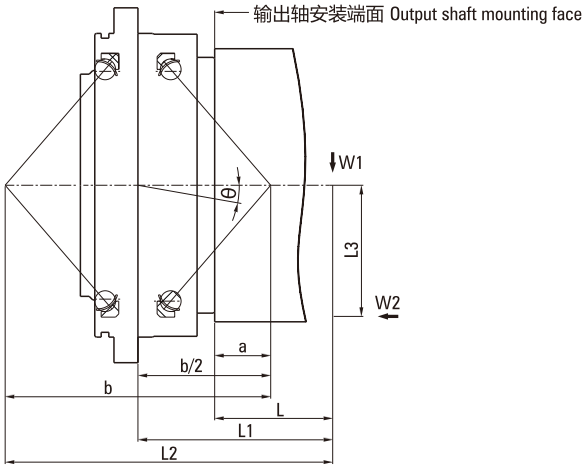

型号 Model	弯曲刚度 Bending Stiffness	a (mm)	b (mm)	型号 Model	弯曲刚度 Bending Stiffness	a (mm)	b (mm)
120BX	117	17.6	91.6	10CBX	421	28.0	119.2
150BX/35BX	372	20.1	113.3	27CBX	1068	38.2	150.3
190BX/65BX	931	29.6	143.7	50CBX	1960	50.4	187.1
220BX	1176	33.4	166.0	100CBX/120CBX	2813	58.7	207.6
250BX	1470	32.2	176.6	200CBX	9800	76.0	280.4
280BX	2940	47.8	210.9	320CBX	12740	114.5	360.5
320BX	4900	56.4	251.4	500CBX	24500	125	413.4
370BX	7448	69	292.7	-	-	-	-

术语概念解释 Explanation Of Terms Concept:

名词 Noun	解释 Explanation	作用 Effect	备注 Remarks
速比值 Speed ratio	这里指输出与输入的比值。 This refers to the output and input ratio.		RV-C的区别 RV-C difference
额定转速 Rated speed	在额定寿命实验时的转速。 Speed at rated life test.	寿命计算 Life calculation	
额定转矩 Rated torque	在额定寿命实验时的转矩。 Torque at rated life test.	寿命计算 Life calculation	
额定寿命 Rated life	指额定转速和额定力矩条件下，减速器的寿命。 Torque at rated life test.	寿命计算 Life calculation	
容许最大输出转矩 Allowable maximum output torque	是指允许的最高转速。 Refers to the maximum allowable speed.	转速校核 Speed check	主要使用时，壳体的温度不能超过60℃。 The main use, the shell temperature can not exceed 60℃.
启动、停止时的容许转矩 Permissible torque at start and stop	启动（停止）时，有惯性转矩引起，远高于减速机稳定时间转矩。 When starting (stop), there is inertia torque, which is much higher than the gearbox stable time torque.	启动，停止时力矩校核。 Start, stop when the torque check.	

名词 Noun	解释 Explanation	作用 Effect	备注 Remarks
瞬间最大容许转矩 Instantaneous maximum allowable torque	由于紧急停止或外部的冲击，可能会使减速机承受较大转矩。 Due to an emergency stop or an external shock, the gear unit may be subjected to a large torque.	冲击寿命计算 Impact life calculation	
力矩刚性 Moment of rigidity	当减速机输出轴的偏斜1arc min时，减速机承受的弯矩。 When the reducer output shaft deflection 1arc min, the reducer to withstand the bending moment.		
弯曲刚度 Bending stiffness	当减速机输出轴的转动1arc min时，减速机承受的转矩。 When the reducer output shaft rotation 1arc min, the reducer to withstand the torque.		
容许力矩（弯矩） Allowable torque (Bending torque)	指减速机能承受的外部弯矩。 Refers to the reducer can bear external bending moment.	弯矩校核 Bending moment check	
瞬时容许力矩 Instantaneous allowable moment	由于紧急停止等，特殊情况引起的瞬时最大弯矩。 Due to emergency stop, etc., caused by special circumstances instantaneous maximum moment.	弯矩校核 Bending moment check	一般为减速器容许力矩的2倍 Generally twice the allowable torque of the reducer
容许推力 Allow thrust	减速机能承受的最大负载力。 Reducer can withstand the maximum load force.	推力校核 Thrust check	
空程 Empty trip	在额定转矩±3%处的迟滞曲线宽度的重点的扭转角。 Hysteresis curve at the rated torque ±3% of the width of the focus of the torsion angle.	精度 Accuracy	也就是回差 That's the setback
齿隙 Backlash	迟滞曲线的转矩“零”处的转角。 Hysteresis Curve Torque at "zero".	精度 Accuracy	
角度传递误差（传动误差） Angle transmission error (Transmission error)	角度传递误差是指输入任意角度时，理论输出选择角度与实际输出旋转角之间的误差。 Angle of transmission error refers to the input of any angle, the theoretical output choice angle and the actual output angle between the error.	精度 Accuracy	
无负载运行转矩 No load running torque	无负载运转减速机所需要输入转矩。 No load operation reducer input torque required.		
增速启动转矩 Increase speed start torque	使减速器反转的最小输出端加载转矩。 The minimum output torque that reverses the gear unit is applied.		

产品构造、型号和尺寸
PRODUCT STRUCTURE, MODEL AND DIMENSION

减速器由输出法兰、支撑法兰、针齿壳、摆线齿轮、曲柄轴、行星齿轮、针齿、输入齿轮（选件）、主轴承、圆锥滚子轴承、滚针轴承连保持架、油封等组成。

The reducer is composed by output flange,s upporting flange, needle gear housing, cycloid gear, crank shaft, planetary gear, gear pin, input gear (optional), main bearing, cone roller bearings, needle roller bearings to keep frame and oil seal.

减速器构造 Reducer Structure

● **图2-E系列减速器构造** Figure 2-E series reducer structure

1-针齿壳 Needle tooth shell
2-针齿 Pin gear
3-主轴承 Main bearing
4-输出法兰 Output flange
5-支撑法兰 Supporting flange
6-输入轴 Input shaft
7-曲轴 Crankshaft
8-行星齿轮 Planetary gear
9-摆线齿轮 Cycloidal gear

● **图3-C系列减速器构造** Figure 3-C series reducer structure

1-摆线齿轮 Cycloidal gear
2-输出法兰 Output flange
3-针齿壳 Needle tooth shell
4-针齿 Pin gear
5-主轴承 Main bearing
6-支撑法兰 Supporting flange
7-曲轴 Crankshaft
8-行星齿轮 Planetary gear
9-中心齿轮 Central gear
10-低速管 Low speed tube

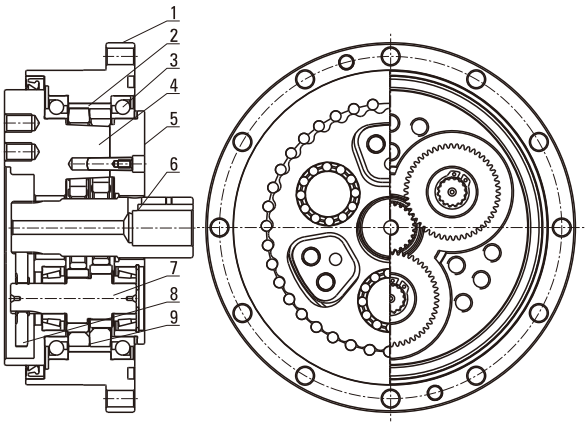

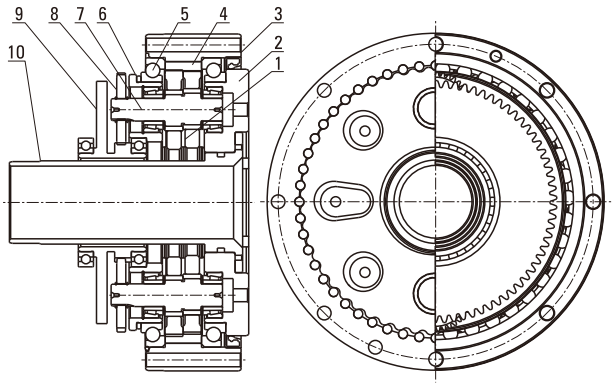

减速器外形尺寸 Reducer Outline Dimension

- E系列减速器外形尺寸参见P11~P23。 E series reducer outline dimensions see P11~P23.
- C系列减速器外形尺寸参见P24~P36。 C series reducer outline dimensions see P24~P36.

使用环境 Using Environment

● **在下列的环境条件下，减速器应能正常运行** In the following environmental conditions, the reducer should be able to operate normally:

——环境空气最高温度随季节而变化，但不超过40℃。The highest ambient temperature is changed by seasons and less than 40℃.
——环境空气最低温度为-10℃。The lowest ambient temperature is -10℃.

型号命名 Model Number

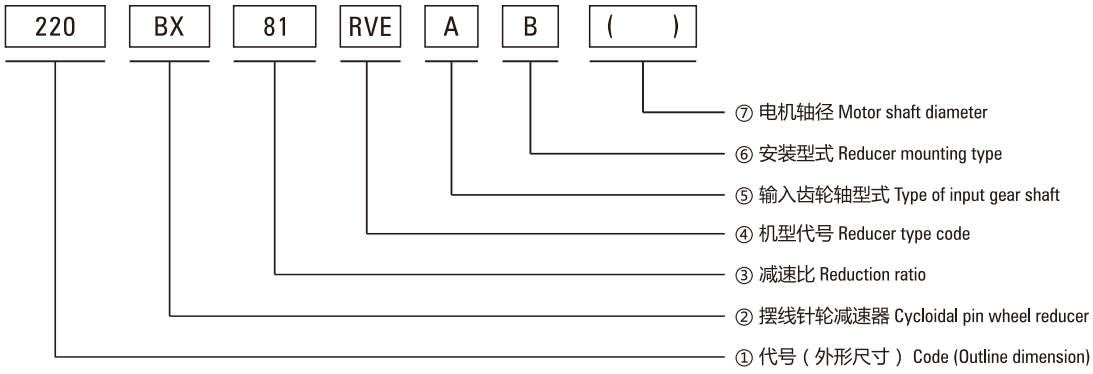

● ① **代号，具体见表1** Code, specific see table 1

减速器代号 Reducer Code

E 系列 E Series			C 系列 C Series		
代号 Code	外形尺寸(mm) Outline dimension (mm)	通用型号 General model	代号 Code	外形尺寸(mm) Outline dimension (mm)	原代号 The original code
120	Φ122	6E	10C	Φ145	150
150	Φ145	20E	27C	Φ181	180
190	Φ190	40E	50C	Φ222	220
220	Φ222	80E	100C	Φ250	250
250	Φ244	110E	200C	Φ345	350
280	Φ280	160E	320C	Φ440	440
320	Φ325	320E	500C	Φ520	520
370	Φ370	450E	/	/	/

● ② **BX：摆线针轮减速器** BX: Cycloidal pin wheel reducer

● ③ **81：减速比，具体见表2** 81: Gear ratio, specific see table 2

减速比 Reduction Ratio

E 系列 E Series		C 系列 C Series	
代号 Code	减速比 (输出法兰输出) Reduction ratio (output flange output)	代号 Code	单体减速比 Monomer reduction ratio
120	31, 43, 53.5, 59, 79, 103	10CBX	27.00
150	41, 57, 81, 105, 121, 141, 161	27CBX	36.57
190	41, 57, 81, 105, 121, 153	50CBX	32.54
220	57, 81, 101, 121, 153	100CBX	36.75
250	81, 111, 161, 175.28	200CBX	34.86
280	81, 101, 129, 145, 171	320CBX	35.61
320	81, 101, 118.5, 129, 141, 171, 185	500CBX	37.34
370	81, 101, 118.5, 129, 154.8, 171, 192.4	/	/
注1: E系列如由外壳 (针齿壳) 输出，减速比相应减1。Note 1: E series, such as by the shell (pin shell) output, the corresponding reduction ratio by 1.			
注2: C系列减速比是指电机安装在外壳的减速比，如安装在输出法兰侧，减速比相应减1。Note 2: C series gear ratio refers to the motor installed in the casing of the reduction ratio, if installed on the output flange side, the corresponding reduction ratio by 1.			

● ④ **减速器机型代号** Reducer type code

RVE: 主轴承内置E型 Main bearing built-in E type

RVC: 中空型 Hollow type

REA: 带输入法兰E型 With input flange E type

RCA: 带输入法兰中空型 With input flange hollow type

● ⑥ **减速器安装型式** Reducer mounting type

B: 输出轴螺栓紧固连接 Output shaft bolt fastening connection

P: 输出轴螺栓及定位销并用型式
Output shaft bolts and locating pins with the type

● ⑤ **输入齿轮轴型式及电机轴径**
Enter the gear shaft type and motor shaft diameter

A: 标准型式A, E系列输入齿轮A轴 (P21)。
Standard Type A, E Series Input Gear A-axis (P21).
C系列代表标准中心齿轮。C Series represents the standard sun gear.

B: 标准型式B, E系列输入齿轮B轴 (P21)。
Standard Type B, E Series Input Gear B-axis (P21).

Z: 特配型式。 Special matching type.

W: 无。 Nothing.

TB: C系列 同步带轮输入型式 C series synchronous pulley input type.

● ⑦ **电机轴径** Motor shaft diameter

技术要求
TECHNICAL REQUIREMENT

外观质量、标志：减速机外观应整洁、美观，标志清晰、正确
Appearance Quality, Marks: Reducer Appearance Should Be Neat, Beautiful, Clear, Correct

- 减速机表面不应有碰伤、划痕、毛刺、凹坑和锈蚀等明显缺陷。Reducer's appearance should not be bumps, scratches, burrs, pits and coeeosion etc.
- 紧固件连接应牢靠，锁紧，密封应可靠。Fastener connection should be firm, lock, seal should be reliable.
- 标志的字迹应清晰、正确，经规定的环境条件试验后，标记和字迹仍应清晰可见。Mark should be clear and correct after the testing, the mark should be clearly.
- 减速器应有可靠的防锈措施。Reducer should have reliable anti rust measures.

基本尺寸 Basic Dimensions

- 减速器的外形尺寸、安装尺寸应符合P11~P18和P19~P23的图纸或客户要求并得到客户确认的图纸要求。
  Deceleration device installation size, size should be consistent with the P11~P18 and P19~P23 of the drawing or customer requirements and customer confirmation drawings.
- 输入齿轮轴、安装法兰等可依客户要求生产，生产前相关图纸应得到客户的确认。
  Input shaft and installation flange can be produced as customer's requirements. before the producting, it should get customer's comfirmation drawing.

空转试验 Idle Test

- 空转运行试验：减速器在输入转速≤3000r/min下空载运行10min，减速器运转应平稳正常，无异常或冲击性噪声。
  Noload operating test: After reducers work under noload for 10min with input speed ≤3000r/min, reducer can run steadily, no abnormal or impacting noise.
- 速比试验: 减速器速比应符合标定值。
  Ratio test: The speed ratio of the reducer should be in accordance with the calibration value.

噪声 Noise

- 减速器在输入转速≤3000r/min下空载运行，其噪声应小于75^{+3}dB(A)。
  The reducer running in no-load input speed is less than or equal to 3000r/min, the noise should be less than 75^{+3}dB(A).

转矩 Torque

- 减速器在额定输出转矩条件下连续运转2小时以上，减速器能正常运转，无异音。
  Reducers work continuously for over 2 hours at rated torque, no abnormal noise.
- 减速器在工作环境温度,额定负载下连续工作，减速器壳温升应小于45K，减速器外壳温度小于60℃。
  After reducers work continuously, reducer's temperature should less than 45K, Reducer housing temperature is less than ＜60℃.
- 减速器传动效率应符合表3、表4的要求。
  Gear reducer transmission efficiency should meet the requirements of table 3, table 4.
- E系列减速器输出转矩符合表3的规定。
  E series reducer output torque in accordance with the provisions of table 3.
- C系列减速器输出转矩符合表4的规定。
  C series reducer output torque in accordance with the provisions of table 4.

表3–E系列输出转矩及效率 Table 3-E series output torque and efficiency

输出转速项目 Output Speed Project / 型号 Model	5 r/min		15 r/min			25 r/min		30 r/min		容许最高输出转速 Maximum Allowable Loss Out Speed
	输出转矩 Output Torque N.m	输入功率 Input Power Kw	输出转矩 Output Torque N.m	输入功率 Input Power Kw	效率 Efficiency %	输出转矩 Output Torque N.m	输入功率 Input Power Kw	输出转矩 Output Torque N.m	输入功率 Input Power Kw	r/min
120BX	115	0.075	58.8	0.115	80	62	0.2	64	0.25	100
150BX	245	0.16	196	0.385	80	153	0.5	153	0.6	75
35BX	329	0.23	254	0.5	80	203	0.71	192	0.8	75
190BX	612	0.4	392	0.77	80	367	1.2	382	1.5	70
65BX	745	0.52	575	1.13	80	460	1.61	435	1.81	70
220BX	1146	0.75	784	1.54	80	673	2.2	637	2.5	70
250BX	1528	1.0	1078	2.12	80	978	3.2	892	3.5	50
280BX	2292	1.5	1568	3.1	80	1437	4.7	1274	5.0	45
320BX	4584	3.0	3136	6.2	80	2903	9.5	2802	11.0	35
370BX	6112	4.0	4410	8.66	80	/	/	/	/	25

注1: 额定转矩是指输出转速为15 r/min时的输出转矩。输入功率考虑了减速器的效率。
Note 1: The rated torque is the output torque of the output speed of 15 r/min. The input power considers the efficiency of the reducer.

注2: 转矩计算公式 Note 2: Torque calculation formula:
T=9549XPXη/N （T: 转矩Nm, P: 功率Kw, N: 转速r/min, η: 效率%）。T=9549XPXη/N (T: Torque Nm, P: Power Kw, N: Speed r/min, η: Efficiency %).

● **表4–C系列输出转矩及效率** Table 4-C output series torque and efficiency

输出转速项目 Output Speed Project / 型号 Model	5 r/min		15 r/min			25 r/min		30 r/min		容许最高输出转速 Maximum Allowable Loss Out Speed
	输出转矩 Output Torque N.m	输入功率 Input Power Kw	输出转矩 Output Torque N.m	输入功率 Input Power Kw	效率 Efficiency %	输出转矩 Output Torque N.m	输入功率 Input Power Kw	输出转矩 Output Torque N.m	输入功率 Input Power Kw	r/min
10CBX	134	0.09	98	0.20	78	89	0.3	87	0.35	80
27CBX	372	0.25	264	0.54	78	239	0.8	223	0.90	60
50CBX	745	0.50	490	1.00	78	447	1.5	434	1.75	50
100CBX	1490	1.00	980	2.00	78	894	3.0	819	3.30	40
120CBX	1490	1.00	1176	2.36	78	941	3.16	856	3.45	40
200CBX	2235	2.00	1960	4.00	78	1788	6.0	1638	6.60	30
320CBX	4470	3.00	3136	6.30	78	2830	9.5	/	/	25
500CBX	7003	4.70	4900	10.0	78	/	/	/	/	20

注1: 额定转矩是指输出转速为15rpm时的输出转矩。输入功率考虑了减速器的效率。
Note 1: The rated torque is the output torque of the output speed of 15rpm. The input power considers the efficiency of the reducer.

注2: 转矩计算公式 Note 2: Torque calculation formula:
T=9549XPXη/N （T: 转矩Nm, P: 功率Kw, N: 转速RPM, η: 效率% ）。T=9549XPXη/N (T: Torque Nm, P: Power Kw, N: Speed RPM, η: Efficiency %).

传动精度、扭转刚度、齿隙与回差 Transmission Precision, Torsional Stiffness, Backlash And Backlash

- 减速器扭转刚度、齿隙和回差应符合表5及表6的要求。
  The torsional stiffness, backlash and backlash of the gear reducer shall meet the requirements of table 5 and table 6.
- 减速器传动精度应符合表5及表6的要求。
  The transmission accuracy of gear reducer shall conform to the requirements of table 5 and table 6.

寿命 Life

- 减速器在额定转速和额定负载下运转，减速器工作寿命应为6000小时以上。
  When the reducer is working on rated speed and on-loading, reducer 's lift time is more than 6000 hours.

容许力矩（弯矩） Allowable Torque (Bending Torque)

- 瞬时容许力矩一般为减速器容许力矩的2倍。
  The instant allowable torque is generally twice the allowable torque of the reducer.
- 减速器容许力矩应符合表5、表6的要求。
  The allowable torque of the gear reducer shall meet to the requirements of table 5 and table 6.

过载 Overload

- 减速机在额定扭矩的125%进行过载试验运行5min，运行期间不得有异常噪声和损坏等现象。
  After reducer working under over-load for 5min with 125% rated torque, dudring the running, it have no noise and other damage.

减速器技术参数参见表5及表6 Reducer Technical Parameters See Table 5 And Table 6

● **表5–C系列技术参数** Table 5-C series of technical parameters

项目 Project / 型号 Model	减速器单体减速比 Retarder Monomer Reduction Ratio	容许力矩 Allowable Moment N.m	扭转刚度 Torsional Rigidity N.m/(Arc.min)	启动停止许用输出转矩 Stat And Stop Allowing Output Torque N.m	瞬时容许最大转矩 Instantaneous Maximum Torque N.m	传动精度 Transmission Accuracy Arc.min	齿隙回差 Backlash Of Backlash Arc.min	寿命 Life h	减速器单体惯性力矩 Retarder Inertia Moment Kg.m²	重量 Weight kg
10CBX	27.00	686	47	245	490	1.0	1.0	6000	$1.380X10^{-5}$	4.60
27CBX	36.57	980	147	662	1323	1.0	1.0	6000	$0.550X10^{-4}$	8.50
50CBX	32.54	1764	255	1225	2450	1.0	1.0	6000	$1.820X10^{-4}$	14.6
100CBX	36.75	2450	510	2450	4900	1.0	1.0	6000	$0.475X10^{-3}$	19.5
120CBX	36.75	2940	588	2990	5880	1.0	1.0	6000	$0.475X10^{-3}$	19.5
200CBX	34.86	8820	980	4900	9800	1.0	1.0	6000	$1.390X10^{-3}$	55.6
320CBX	35.61	20580	1960	7840	15680	1.0	1.0	6000	$0.518X10^{-2}$	79.5
500CBX	37.34	34300	3430	12250	24500	1.0	1.0	6000	$0.996X10^{-2}$	154

说明Note: 惯性力矩值是减速器单体的值，不考虑中心齿轮、输入齿轮的惯性力矩。电机轴换算的惯性力矩值请参照以下公式计算。
Inertial moment value is the value of the reducer unit, without considering the inertial moment of the central gear and the input gear. For the inertia moment value converted by the motor shaft, refer to the following formula.

$$\frac{\text{惯性力矩(减速器单体)+中心齿轮的惯性力矩 Inertia moment (Reducer Unit) + Inertia moment of the central gear}}{\text{(中心齿轮大齿轮的齿数/输入齿轮的齿数)}^2 \text{ (Tooth Number of Central Gear/Tooth Number of Input Gear)}^2} + \text{输入齿轮的惯性力矩 Inertia moment of input gear}$$

● **表6-E系列技术参数** Table 6-E series of technical parameters

项目 Project / 型号 Model	速比值 Ratio Value 轴输出 Axis Output	速比值 Ratio Value 壳输出 Shell Output	容许力矩 Allowable Moment N.m	扭转刚度 Torsional Rigidity N.m/(Arc.min)	启动停止许用输出转矩 Stat And Stop Allowing Output Torque (N.m)	瞬时容许最大转矩 Instantaneous Maximum Torque N.m	传动精度 Transmission Accuracy Arc.min	齿隙回差 Backlash Of Backlash Arc.min	寿命 Life h	惯性力矩 (I=GD²/4) Moment of inertia 输入轴换算值 Input axis conversion value (kg-m²)	重量 Weight kg
120BX	53.50	52.50	196	20	117	294	1.5	1.5	6000	$1.53X10^{-5}$	2.50
	59.00	58.00								$1.39X10^{-5}$	
	79.00	78.00								$1.09X10^{-5}$	
	103.0	102.0								$0.74X10^{-5}$	
150BX	81.00	80.00	880	49	412	820	1.0	1.0	6000	$6.07X10^{-6}$	4.70
	105.0	104.0								$4.32X10^{-6}$	
	121.0	120.0								$3.56X10^{-6}$	
	141.0	140.0								$2.88X10^{-6}$	
	161.0	160.0								$2.39X10^{-6}$	
35BX	81.00	80.00	1103	73	530	1190	1.0	1.0	6000	$6.07X10^{-6}$	4.6
	105.0	104.0								$4.32X10^{-6}$	
	121.0	120.0								$3.56X10^{-6}$	
	141.0	140.0								$2.88X10^{-6}$	
	161.0	160.0								$2.39X10^{-6}$	
190BX	81.00	80.00	1600	108	1029	2000	1.0	1.0	6000	$2.20X10^{-5}$	9.30
	105.0	104.0								$1.63X10^{-5}$	
	121.0	120.0								$1.37X10^{-5}$	
	153.0	152.0								$1.01X10^{-5}$	
65BX	81.00	80.00	1916	162	1380	2690	1.0	1.0	6000	$2.20X10^{-5}$	9.50
	105.0	104.0								$1.63X10^{-5}$	
	121.0	120.0								$1.37X10^{-5}$	
	153.0	152.0								$1.01X10^{-5}$	
220BX	81.00	80.00	2000	196	1960	3600	1.0	1.0	6000	$6.00X10^{-5}$	13.1
	101.0	100.0								$4.82X10^{-5}$	
	121.0	120.0								$3.96X10^{-5}$	
	153.0	152.0								$2.98X10^{-5}$	
250BX	81.00	80.00	2900	294	2695	5380	1.0	1.0	6000	$9.88X10^{-5}$	17.4
	111.0	110.0								$6.96X10^{-5}$	
	161.0	160.0								$4.36X10^{-5}$	
	175.28	174.28								$3.89X10^{-5}$	
280BX	81.00	80.00	3900	392	3920	7800	1.0	1.0	6000	$1.77X10^{-4}$	26.4
	101.0	100.0								$1.40X10^{-4}$	
	129.0	128.0								$1.06X10^{-4}$	
	145.0	144.0								$0.87X10^{-4}$	
	171.0	170.0								$0.74X10^{-4}$	
320BX	81.00	80.00	7000	980	7840	15600	1.0	1.0	6000	$4.83X10^{-4}$	44.3
	101.0	100.0								$3.79X10^{-4}$	
	118.5	117.5								$3.15X10^{-4}$	
	129.0	128.0								$2.84X10^{-4}$	
	141.0	140.0								$2.54X10^{-4}$	
	171.0	170.0								$1.97X10^{-4}$	
	185.0	184.0								$1.77X10^{-4}$	
370BX	81.00	80.00	8820	1176	11025	22000	1.0	1.0	6000	$8.75X10^{-4}$	66.4
	101.0	100.0								$6.91X10^{-4}$	
	118.5	117.5								$5.75X10^{-4}$	
	129.0	128.0								$5.20X10^{-4}$	
	154.8	153.8								$4.12X10^{-4}$	
	171.0	170.0								$3.61X10^{-4}$	
	192.4	191.4								$3.07X10^{-4}$	

润滑
LUBRICATION

■ **减速器出厂时未填充润滑油脂，在安装时填充建议的润滑油脂，充填量约为减速器内部空腔体积的70~90%**

The lubrication grease is not filled before gearbox leave factory. Please fill in the suggested lubrication grease during assembly, the amount is roughly 70～90% of the gearbox inside cavity volume

■ **润滑油脂一般更换时间为2000小时。润滑油脂被污染或在恶劣的环境下使用时，需检查润滑油脂老化、被污染的情况，并规定更换时间**

Lubricating grease is generally replaced in 2000 hours. When the grease is contaminated or is used in harsh environment, it is necessary to check the condition of aging and pollution, and to change the time

■ **减速器使用润滑油脂：Molywhite RE-00 或VIGO-grease REO 其它相同品级精密减速器专用润滑脂**

Reducer using lubricating oil: Molywhite RE-00 or VIGO-grease REO other similar grade precision reducer special grease

RVE系列外形尺寸图
RVE SERIES OUTLINE DIMENSION DRAWING

■120BX-RVE 外形图 120BX-RVE Outline Drawing

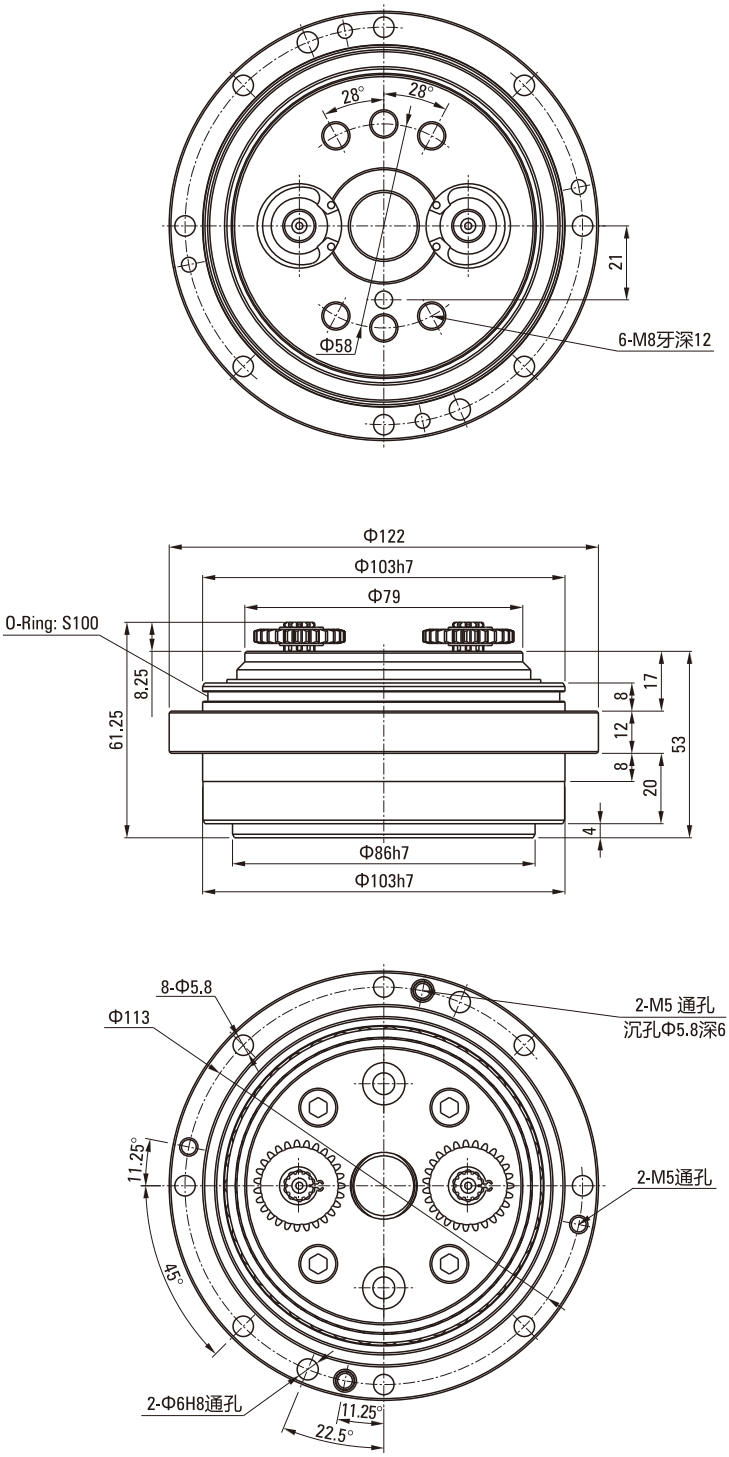

RVE系列外形尺寸图
RVE SERIES OUTLINE DIMENSION DRAWING

150BX-RVE 外形图 150BX-RVE Outline Drawing

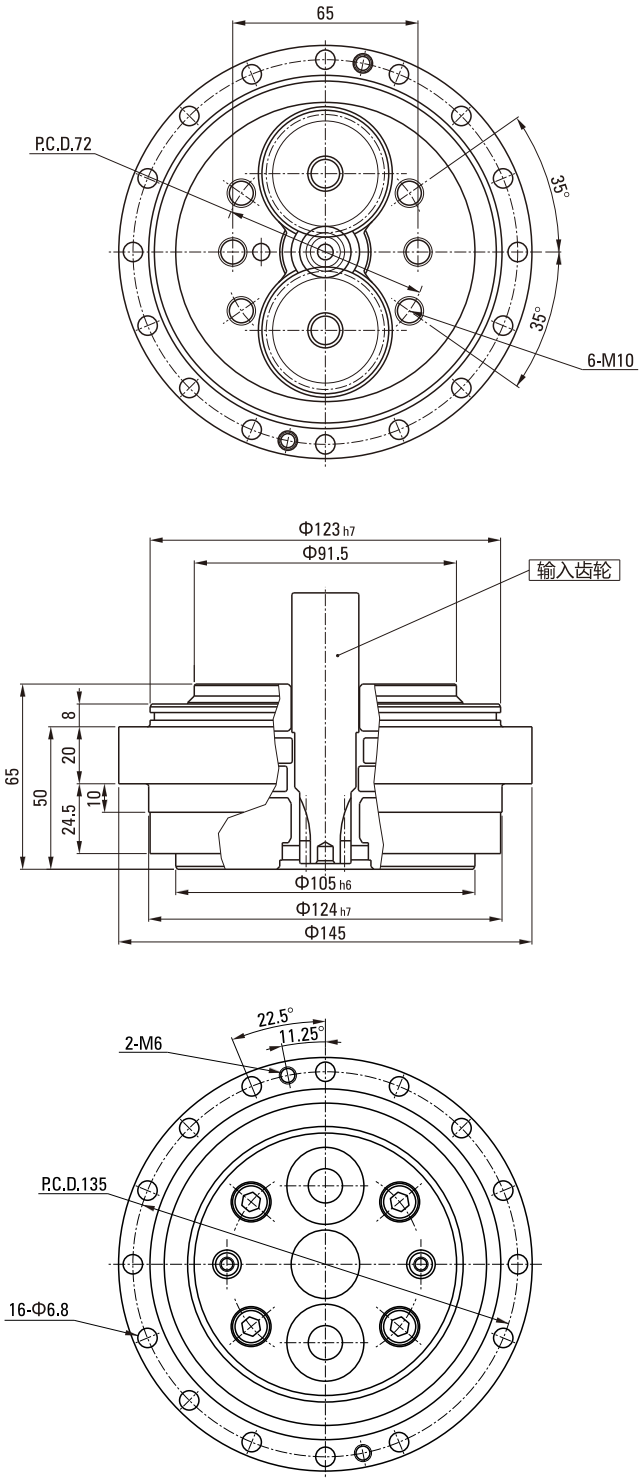

RVE系列外形尺寸图
RVE SERIES OUTLINE DIMENSION DRAWING

35BX-RVE 外形图 35BX-RVE Outline Drawing

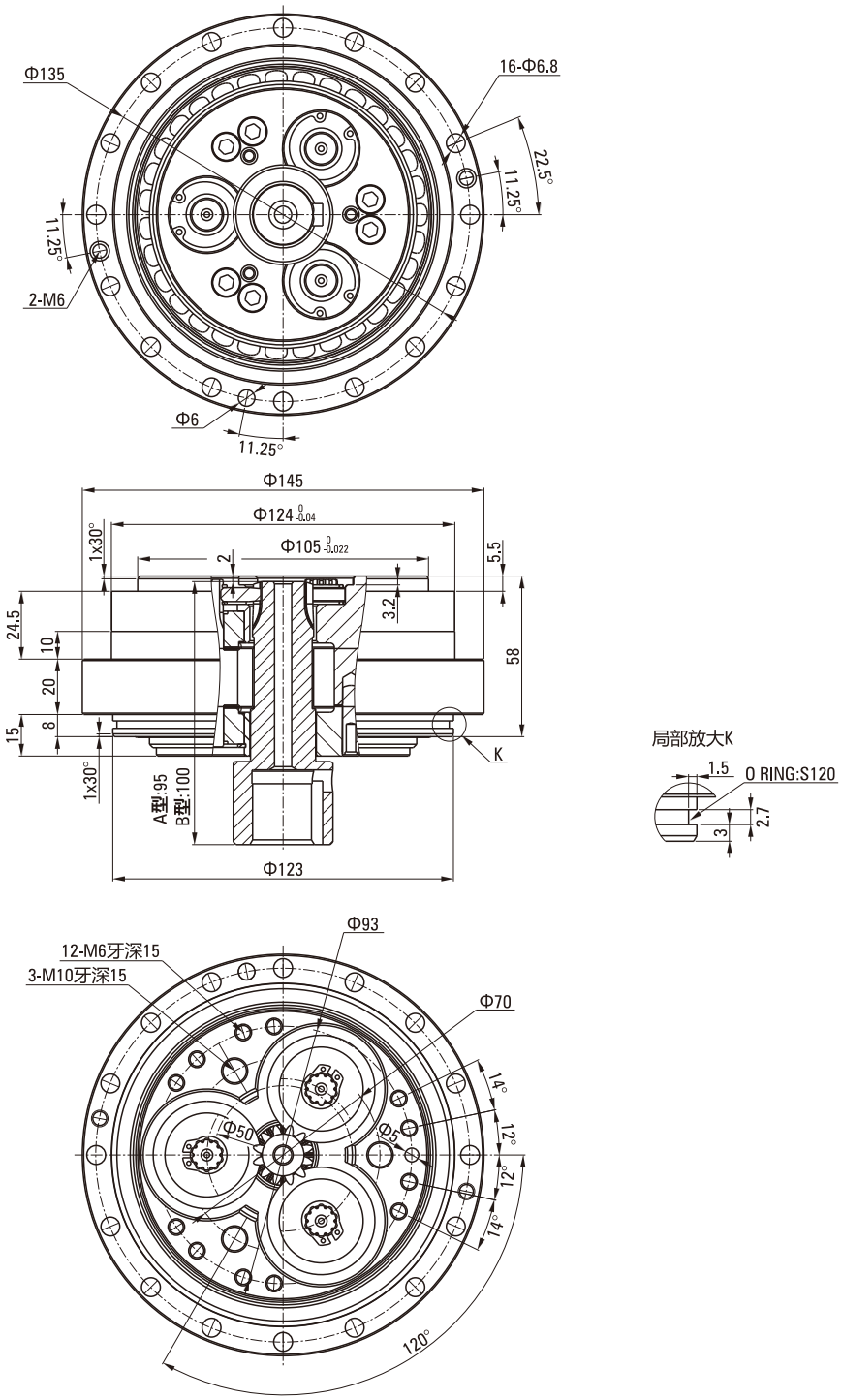

RVE系列外形尺寸图
RVE SERIES OUTLINE DIMENSION DRAWING

■190BX-RVE 外形图 190BX-RVE Outline Drawing

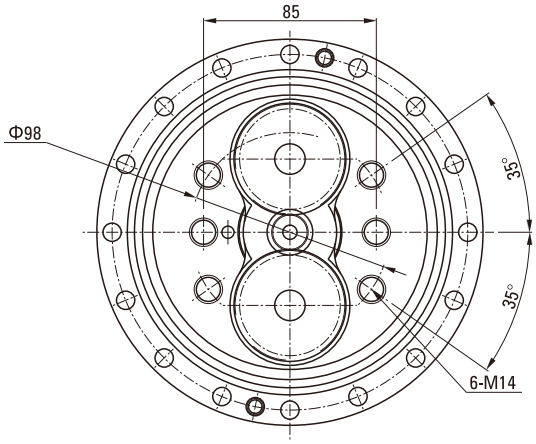

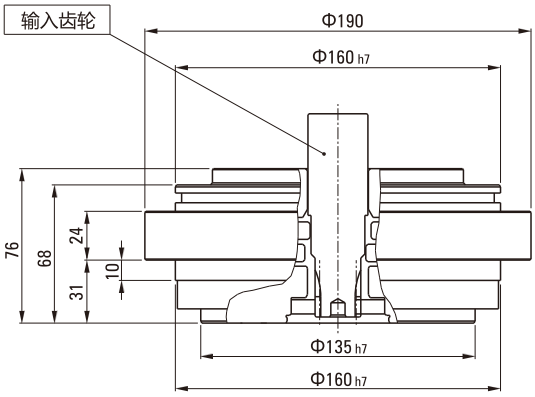

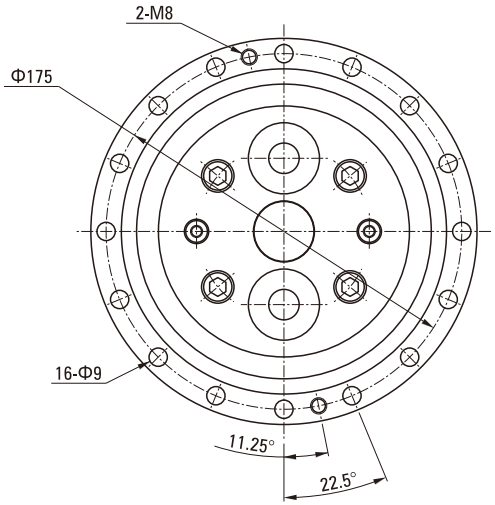

RVE系列外形尺寸图
RVE SERIES OUTLINE DIMENSION DRAWING

65BX-RVE 外形图 65BX-RVE Outline Drawing

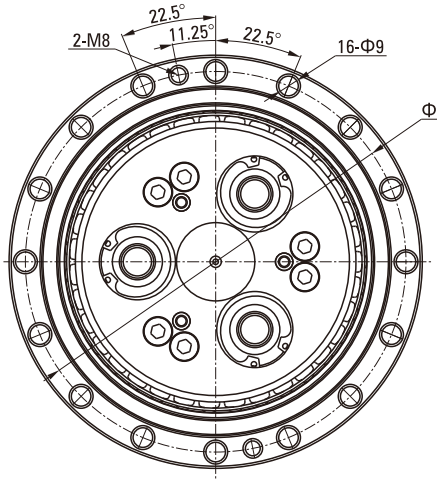

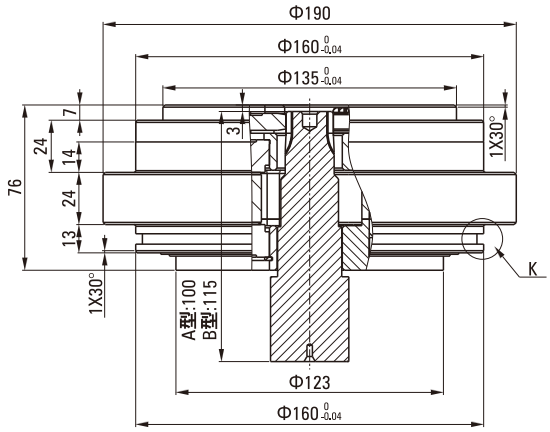

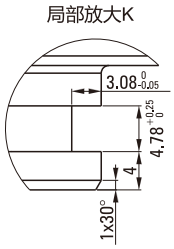

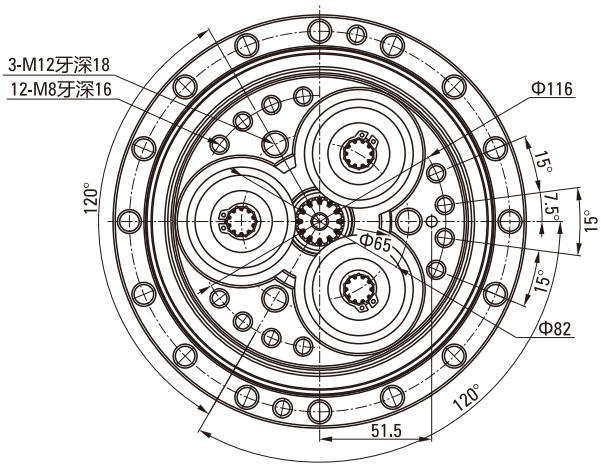

RVE系列外形尺寸图
RVE SERIES OUTLINE DIMENSION DRAWING

220BX-RVE 外形图 220BX-RVE Outline Drawing

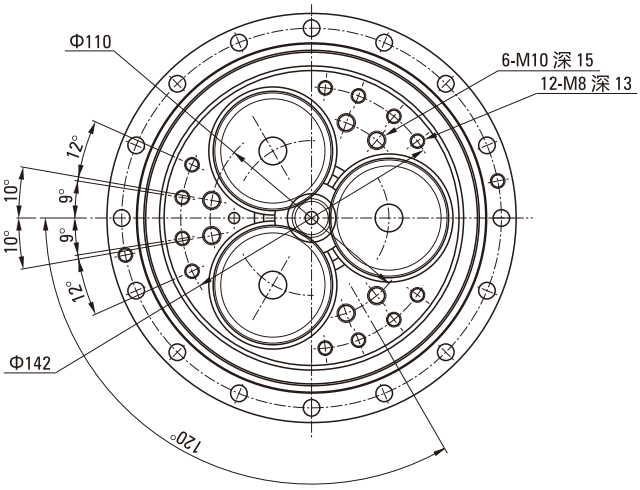

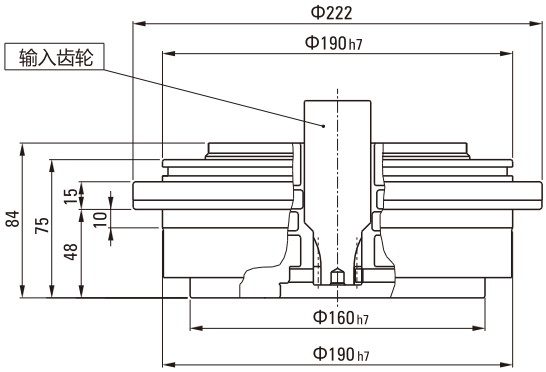

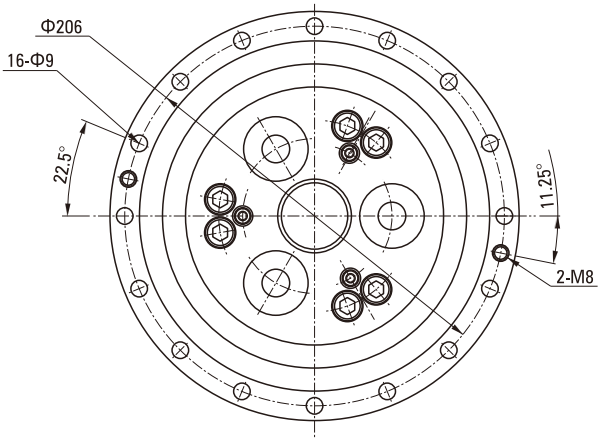

RVE系列外形尺寸图
RVE SERIES OUTLINE DIMENSION DRAWING

250BX-RVE 外形图 250BX-RVE Outline Drawing

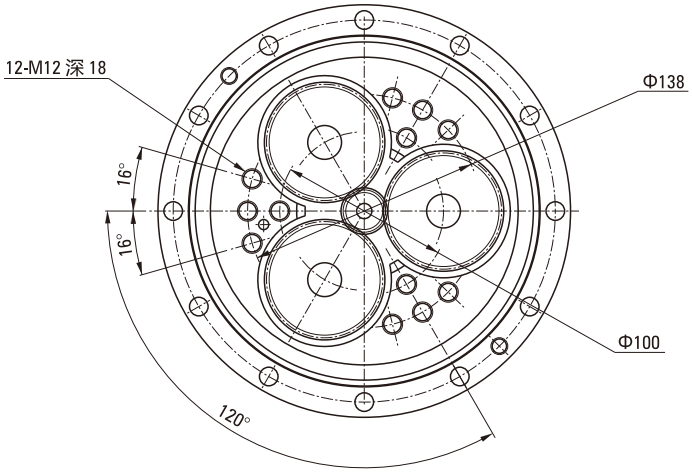

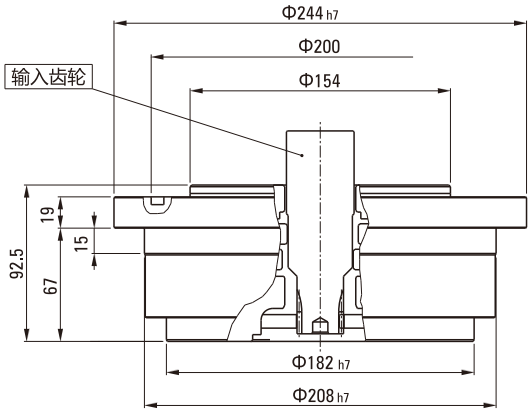

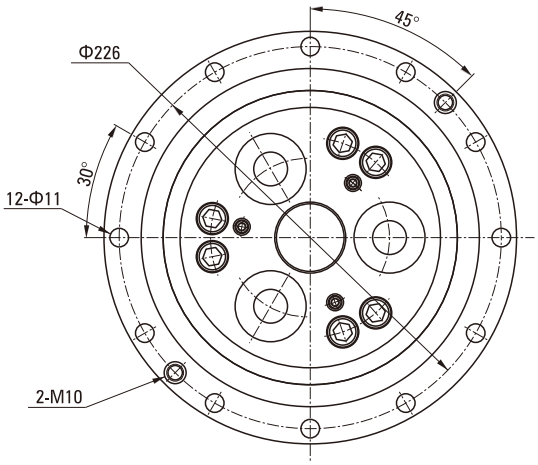

RVE系列外形尺寸图
RVE SERIES OUTLINE DIMENSION DRAWING

280BX-RVE 外形图 280BX-RVE Outline Drawing

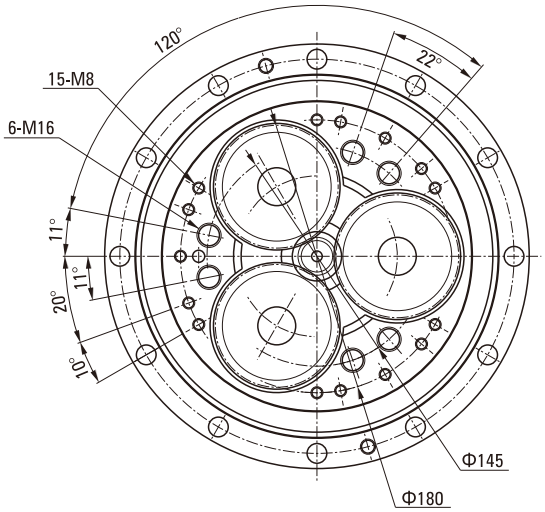

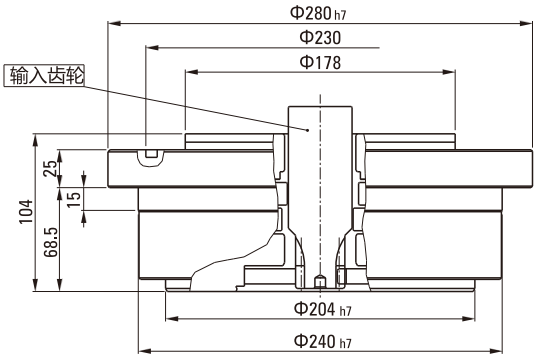

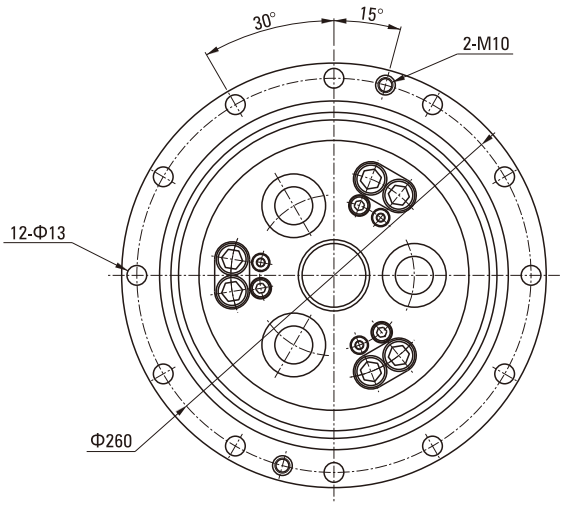

RVE系列外形尺寸图
RVE SERIES OUTLINE DIMENSION DRAWING

320BX-RVE 外形图 320BX-RVE Outline Drawing

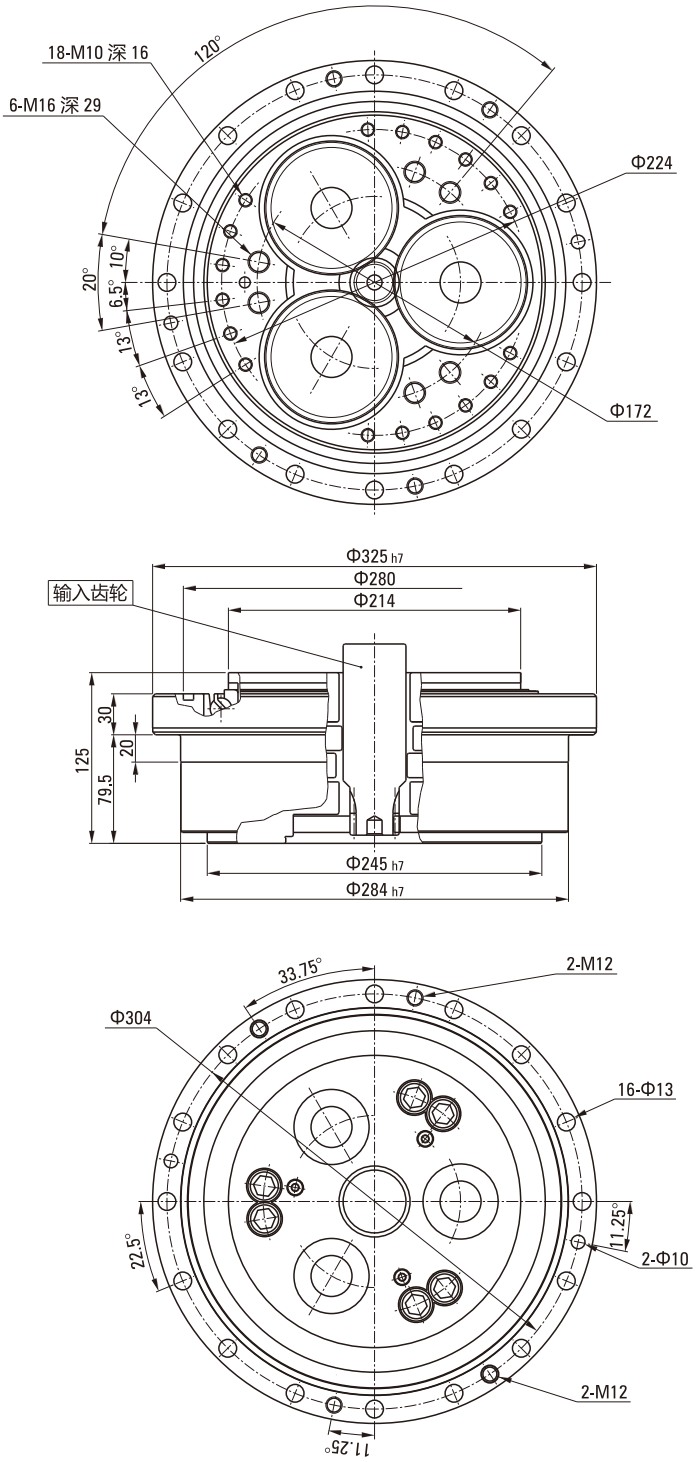

RVE系列外形尺寸图
RVE SERIES OUTLINE DIMENSION DRAWING

370BX-RVE 外形图 370BX-RVE Outline Drawing

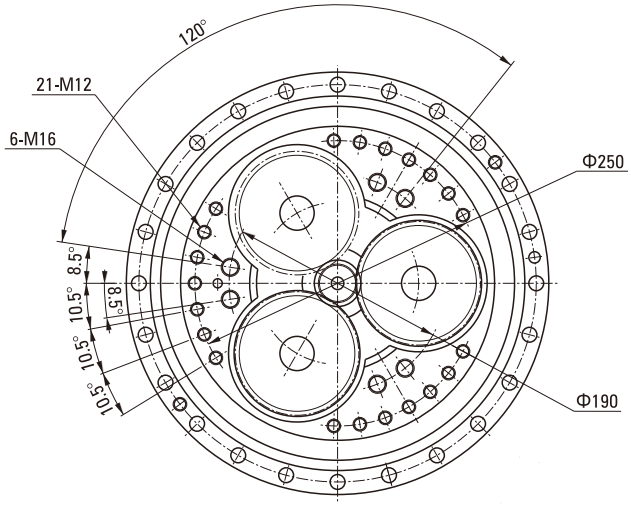

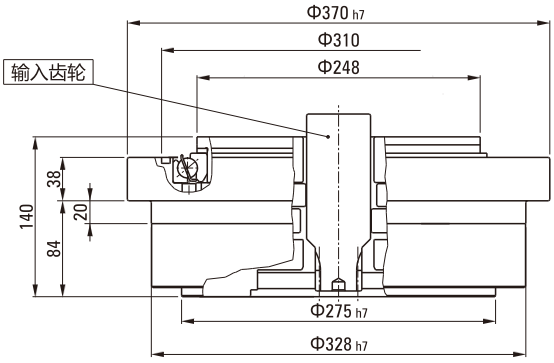

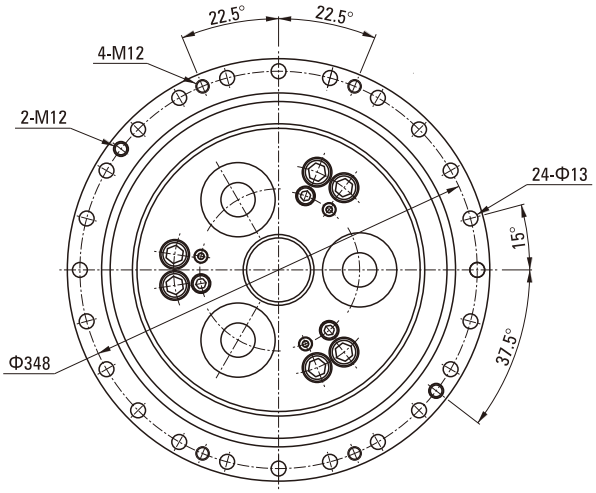

RVE型减速器安装要领
RVE TYPE REDUCER INSTALLATION ESSENTIALS

为了充分发挥RVE减速器的性能，需要对减速器安装精度、安装方法、润滑以及密封进行最佳设计。
in order to make fully use of RVC type reducer, it is need to make a best design of the assembly precision, installation method, lubrication and seal.

装配精度 Assembly Precision

电机轴同减速器的同轴度误差a小于0.03mm (280BX以上机型小于0.05)。
Coaxiality tolerance (a) of motor shaft and reducer is lower than 0.03mm (For models above 280BX, lower than 0.05).
如安装精度不良，特别容易造成振动及噪音。
Because of the poor assembly accuracy, especially easy to cause vibration and noise.

● **图C.1: 装配精度** Figure C.1: Assembly precision

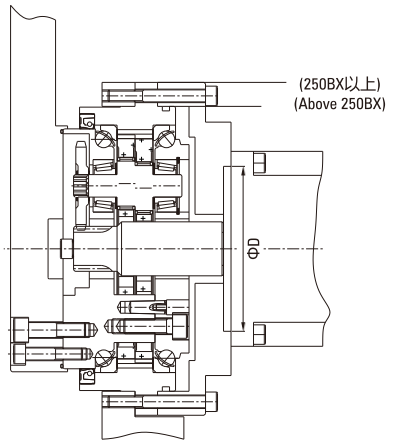

装配要领 Assembly Method

- 装配时须按指定用量封入指定润滑油脂。
  The assembly according to the specified dosage specified sealed grease.
- 减速器装配在配套部件时的标准图示，图C.2所示，图C.2中的"O"形圈位置需进行密封。
  Reducer assembly in the supporting parts of the standard icon, shown in figure C.2, figure C.2 in the "O" ring position to be sealed.
- 如结构上不允许使用 "O" 型圈，请使用表C.3的液体密封胶。
  If the structure is not allowed to use the "O" - shaped ring, please use the table C.3 liquid sealant.
- 装配图示及"O"型圈密封尺寸，见图C.2, 图C.3, 图C.4, 及表C.1, 表C.2。
  Assembly diagram and "O"-shaped ring seal size, see figure C.2, figure C.3, figure C.4, and table C.1, table C.2.

150BX、190BX、220BX:

● **图C.3: 装配示例** Figure C.3: Assembly example

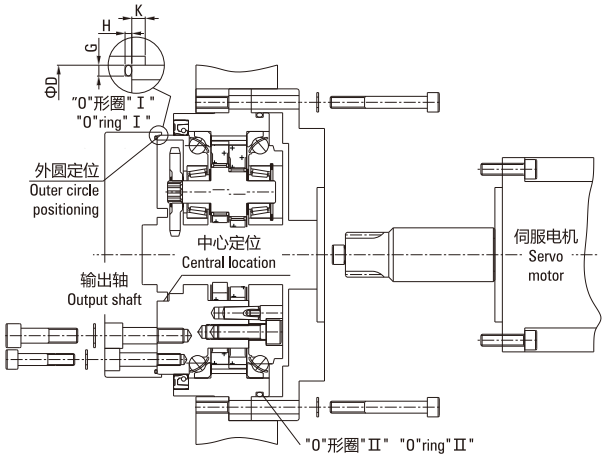

● **图C.2: 装配密封** Figure C.2: Assembly seal

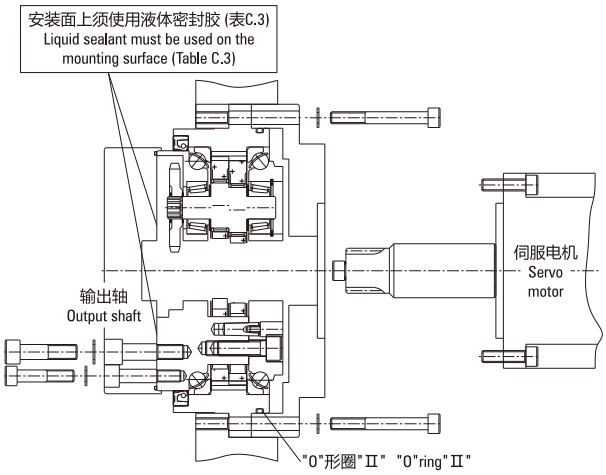

250BX、280BX、320BX:

● **图C.4: 装配示例** Figure C.4: Assembly example

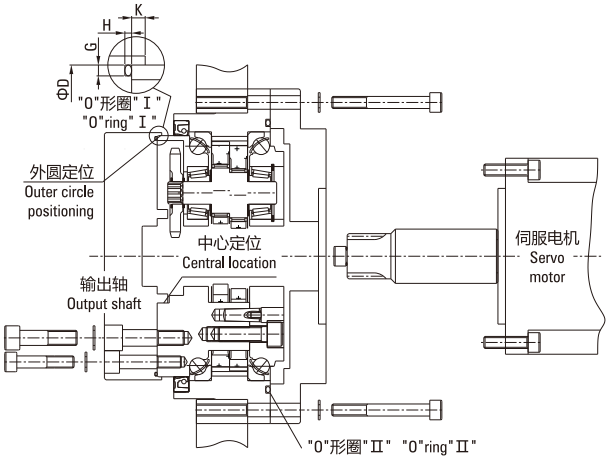

● **表C.1: "O" 型圈（Ⅱ）:** Table C.1: "O" - shaped ring (II)

机型 Model	适用"O"型圈 Apply The "O" Shape Ring
120BX	S100
150BX/35BX	S120
190BX/65BX	AS568-258
220BX	AS568-263
250BX	G190 (B2401)
280BX	G220 (B2401)
320BX	G270 (B2401)
370BX	G300 (B2401)

◀ 图C.3 注: 中心定位和外圆定位选其一。
Figure C.3 note: Center positioning or outer circle positioning.

● **表C.2: “O”型圈(Ⅰ)密封尺寸表(mm):** Table C.2: "O" - shaped ring (I) sealing size table (mm)

代号 Code \ 机型 Model			150BX/35BX (A)	150BX/35BX (B)	190BX/65BX	220BX	250BX	280BX	320BX	370BX
参数 Parameter	O形圈 O ring	代号 Code	AS568-045	S100	S132	AS568-163	AS568-167	AS568-265	AS568-271	AS568-275
		线径 Wire diameter	Φ1.78±0.07	Φ2±0.1	Φ2±0.1	Φ2.62±0.07	Φ2.62±0.07	Φ3.53±0.1	Φ3.53±0.1	Φ3.53±0.1
		内径 Internal diameter	Φ101.32±0.38	Φ99.5±0.4	Φ131.5±0.6	Φ152.07±0.58	Φ177.47±0.58	Φ196.44±0.76	Φ234.54±0.76	Φ266.29±0.76
	凹槽尺寸 Groove size	外径D Outside diameter D	Φ105	Φ105	Φ135	Φ160	Φ182	Φ204	Φ243	Φ273
		深度H Depth H	1.27±0.05	$1.5^{0}_{-0.1}$	$1.5^{0}_{-0.1}$	2.06±0.05	2.06±0.05	2.82±0.05	2.82±0.05	2.82±0.05
		宽度G Width G	$2.39^{+0.25}_{0}$	$2.70^{+0.25}_{0}$	$2.70^{+0.25}_{0}$	$3.58^{+0.25}_{0}$	$3.58^{+0.25}_{0}$	$4.78^{+0.25}_{0}$	$4.78^{+0.25}_{0}$	$4.78^{+0.25}_{0}$
		高度K Height K	3	3	3	3	3	4	4	4

注: 上表中“O”形圈A，B任选一个。Note: On the table of "O"-ring, from A, B option one.

● **表C.3: 推荐液体密封胶** Table C.3: Recommended liquid sealant

名称（制造商） Name (Manufacturer)	性质及用途 Properties And Uses
Three Bond 1211 (Three bond)	■ 硅系无溶剂型 Silicone based non solvent type ■ 半干性充填 Half dry filling
HERME SERL SS-60F (Nihon-hermetric)	■ 无溶剂弹性密封 Solvent free elastic seal ■ 金属接触面适用 Metal contact surface

■注：螺栓和销并用型装配请询问本公司技术人员
Note: Bolt and pin and assembly please ask the company's technical staff

■螺钉的紧固转矩 Fastening Torque Of The Screw

E型减速器，使用内六角螺钉（GB/T 70.1 12.9级），请按表C.4紧固转矩进行紧固。输出轴螺钉及销并用型（P型），请用圆锥销（GB/T 118-2000）。为了防止内六角螺栓松动，建议使用碟形弹簧垫圈。

E type gear reducer, using allen screw (GB/T 70.1 12.9 level), Pls. fasten follow the table C.4 fastening torque. The output shaft screw and pin (P type), Pls. use the the taper pin (GB/T 118-2000). To keep the allen screw from moving, recommend use the disc spring washers.

● **表C.4: 螺钉紧固转矩** Table C.4: Fastening torque of the screw

内六角螺钉 Allen Screw	紧固转矩(Nm) Fastening Torque (Nm)	螺钉参数 Screw Parameters
M5X0.8	9±0.5	1- GB/T 70.1
M6X1.0	16±0.8	2- 12.9级 12.9 level
M8X1.25	37±1.8	3- 发黑处理 Blackening
M10X1.5	73±3.5	4- 圆柱头 Cylinder head
M12X1.75	129±6.5	5- 螺纹精度: 6g或2级
M14X2.0	205±10	Thread precision: 6g or 2 class
M16X2.0	318±16	

■输入齿轮 Input Gear

- 标准输入齿轮是未进行电机轴安装孔加工的产品。
  Standard input gear is without any machine mouting hole of the motor.
- 安装示例如图C.5:（共三种）
  Install sample as shown in picutre C.5: (Three way)

图C.5: 输入齿轮装配 Figure C.5: Input gear assembly

（直轴: 伺服马达轴没螺孔 Direct-axis: Servo motor shaft without thread ）

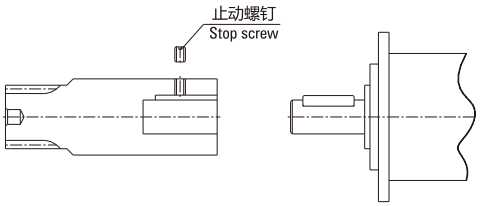

（直轴: 伺服马达轴有螺孔 Direct-axis: Servo motor shaft with thread ）

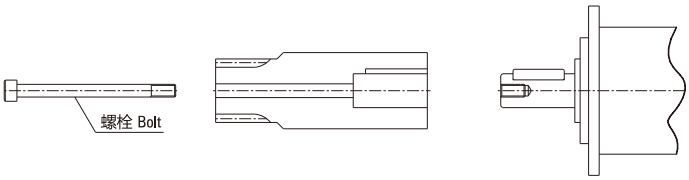

（锥轴: 伺服马达轴有螺栓 Cone axis: Servo motor shaft with bolt ）

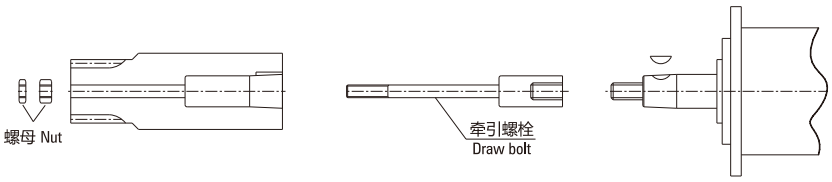

表C.5: 输入齿轮轴A型 Table C.5: A type of input gear shaft

尺寸代号 Size Code	A	B	C	D	d	dd	E	L	NOTE
150BX/35BX-E	25	46	95	23.5	11,14	5.5	21.5	-	“d”不在表内直径(>d)，”D”需要定制，适当加大。 "D" is not in the table diameter (>d), "D" need to be customized, appropriate increase.
190BX/65BX-E	29	53	100	29.5	14,19	6.5	29.5	-	
220BX-E	29	-	100	36.0	19,22	7.0	-	-	
250BX-E	34	70	120	40.0	19,22,24	9.0	38.0	-	
280BX-E	35	-	120	42.0	22,24,28	7.0	-	-	
320BX-E	35	-	140	46.0	24,28	11	-	-	
370BX-E	38	-	155	56.0	28,32,35	11	-	-	

表C.6: 输入齿轮轴B型 Table C.6：B type of input gear shaft

尺寸代号 Size Code	A	B	BB	C	D	E	F	d	dd	L	NOTE
150BX/35BX-E	25	50	66	100	30	21.5	23.5	19	5.5	-	“d”不在表内直径(>d)，”D”需要定制，适当加大。 "D" is not in the table diameter (>d), "D" need to be customized, appropriate increase.
190BX/65BX-E	29	33	76	115	36	26.5	29.5	19,22,24	6.5	-	
220BX-E	29	80	-	130	42	-	36.0	19,22,24	7.0	-	
280BX-E	35	105	-	170	50	-	42.0	24,28,32,35	9.0	-	
320BX-E	35	122	-	185	50	-	46.0	24,28,32,35	11	-	
370BX-E	38	139	-	215	58	-	56.0	32,35,42	11	-	

(输入齿轮轴A型 A type of input gear shaft)

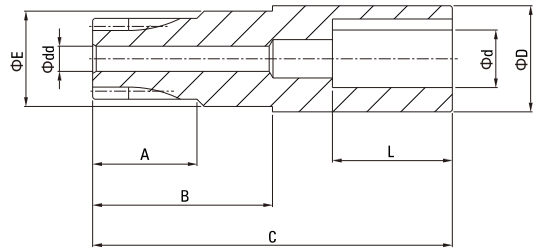

(输入齿轮轴B型 B type of input gear shaft)

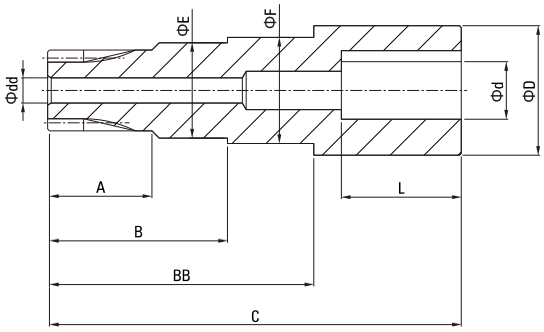

输入齿轮定制服务 Input gear customized service

本公司可提供依所选电机型式进行输入齿轮的定制、加工服务。

Our company can provide input gear customized service according to motor.

150BX、190BX的行星齿轮是二个，装配输入齿轮时需特别注意输入齿轮要径直插入，位置正确，插入时要轻轻旋入，不可强制插入，也不可倾斜插入。（图C.6）

150BX, 190BX have 2 planetary gears. Please pay attention to put gear directly, correctly, and lightly when mounting gear. Do not use force, do not be incline when mounting. (Figure C.6)

• 能贯通减速器内部的速比和不能贯通的速比。
To be able to hole-through ratio of gearbox and cann't hole-through ratio.
不能贯通的速比如表C7.，安装示例见图C.8。
To be unable to hole-through ratio as table C7, install sample as shown in picutre C.8.

图C.6: 装配位置 Figure C.6: Assembly position

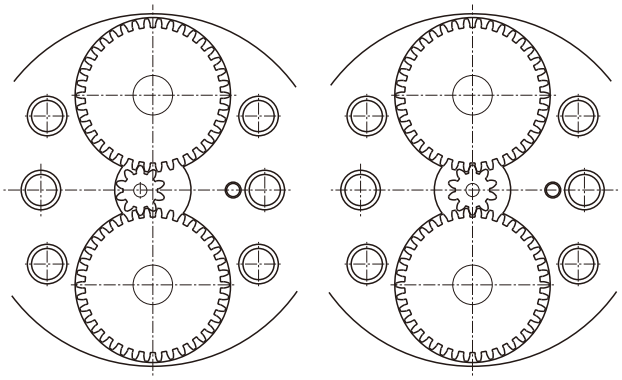

错误的装配
Incorrect assembly

正确的装配
Proper assembly

表C.7: 不能贯通的速比 Tabe C.8: Speed ratio can not be through

	150BX/35BX		190BX/65BX		220BX	
输出轴输出 From output shaft	57	41	57	41	57	41
外壳输出 Housing output	56	40	56	40	56	40

注: 表2中速比为能贯通的速比。能贯通减速器内部的速比安装示例图C.7:
Note: Table 2 is shown hole-through ratio. To be able to hole-through ratio of gearbox is C.7:

图C.7: 能贯通减速器内部的速比安装示例
Figure C.7: To be able to hole-through ratio of gearbox intall shown

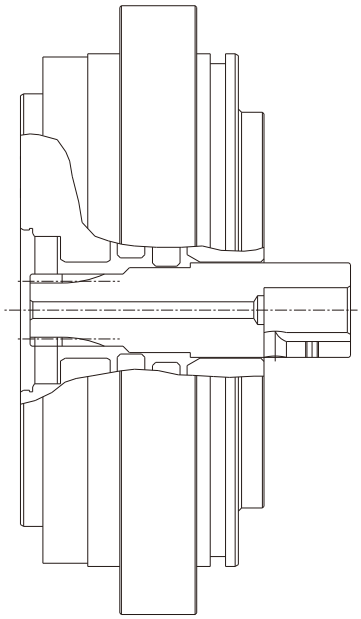

图C.8: 不能贯通减速器内部的速比安装示例
Figure C.8: To be unable to hole-through ratio of gearbox intall shown

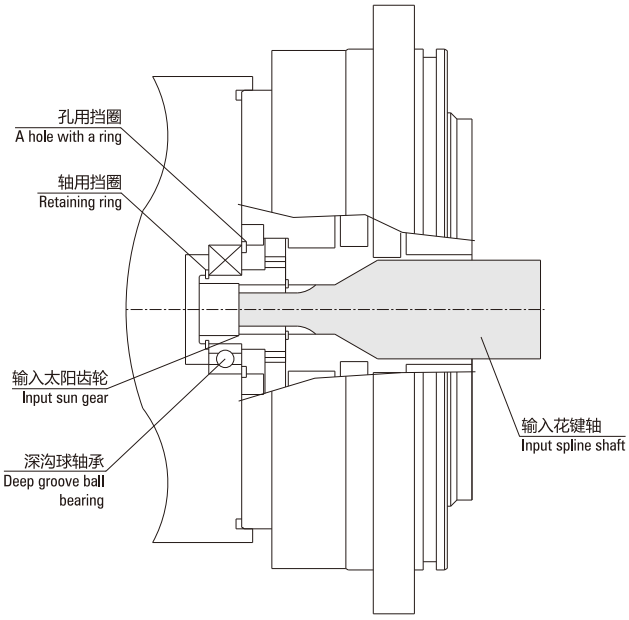

润滑 Lubrication

- 减速器使用润滑油脂: Molywhite RE-00或VIGO-Grease REO其它相同品级精密减速器专用润滑脂。
  Reducer using lubricating oil: Molywhite RE-00 or VIGO-Grease REO other similar grade precision reducer special grease.
- 减速器出厂时未填充润滑油脂，在安装时填充建议的润滑油脂，充填量约为减速器内部空腔体积的70~90%。
  When the gear reducer is not filled with grease, it is recommended to fill the grease at the time of installation, and the filling amount is about 70～90%. of the internal cavity volume of the reducer.
- 润滑油脂一般更换时间为2000小时。润滑油脂被污染或在恶劣的环境下使用时，需检查润滑油脂老化、被污染的情况，并规定更换时间。
  Lubricating grease is generally replaced in 2000 hours. When the grease is contaminated or is used in harsh environment, it is necessary to check the condition of aging and pollution, and changed within the allotted time.
- 减速器润滑油脂建议用量如表C.8:
  Reducer lubrication grease recommended dosage as shown in table C.8:
- 润滑油脂充填位置如图C.9，图C.10:
  Grease filling position as shown in figure C.9, figure C.10:

表C.8: 润滑油脂注入量 Table C.9: Lubricating oil injection

填充量 Filling Amount / 型号 Model	水平安装 Horizontal Installation (cc)	垂直安装 Vertical Installation (cc)	尺寸A Size A (mm)
120BX-RVE	42	48	17
150BX/35BX-RVE	87	100	15
190BX/65BX-RVE	195	224	21
220BX-RVE	383	439	21
250BX-RVE	432	495	6.5
280BX-RVE	630	694	10.5
320BX-RVE	1040	1193	10.5
370BX-RVE	1596	1831	18

图C.9: 润滑油注入位置(水平) Figure C.9: Lubricating oil injection position (horizontal)

(安装水平轴 Install horizontal axis)

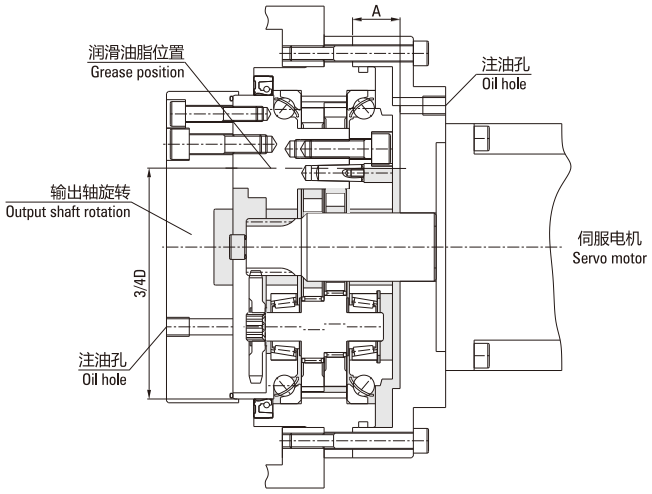

图C.10: 润滑油注入位置(垂直) Figure C.10: Lubricating oil injection position (Vertical)

(安装垂直轴-1 Install vertical axis-1)

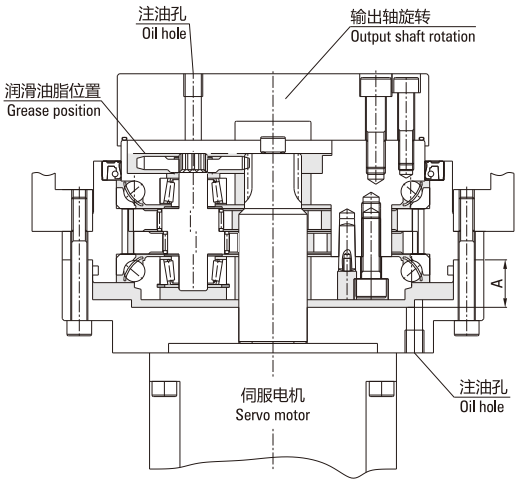

(安装垂直轴-2 Install vertical axis-2)

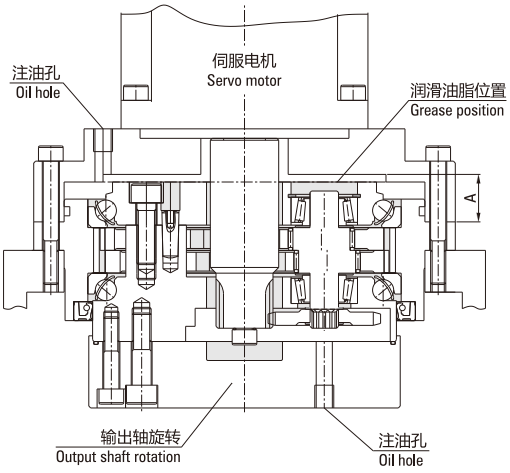

RVC系列外形尺寸图
RVC SERIES OUTLINE DIMENSION DRAWING

10CBX-RVC 外形图 10CBX-RVC Outline Drawing

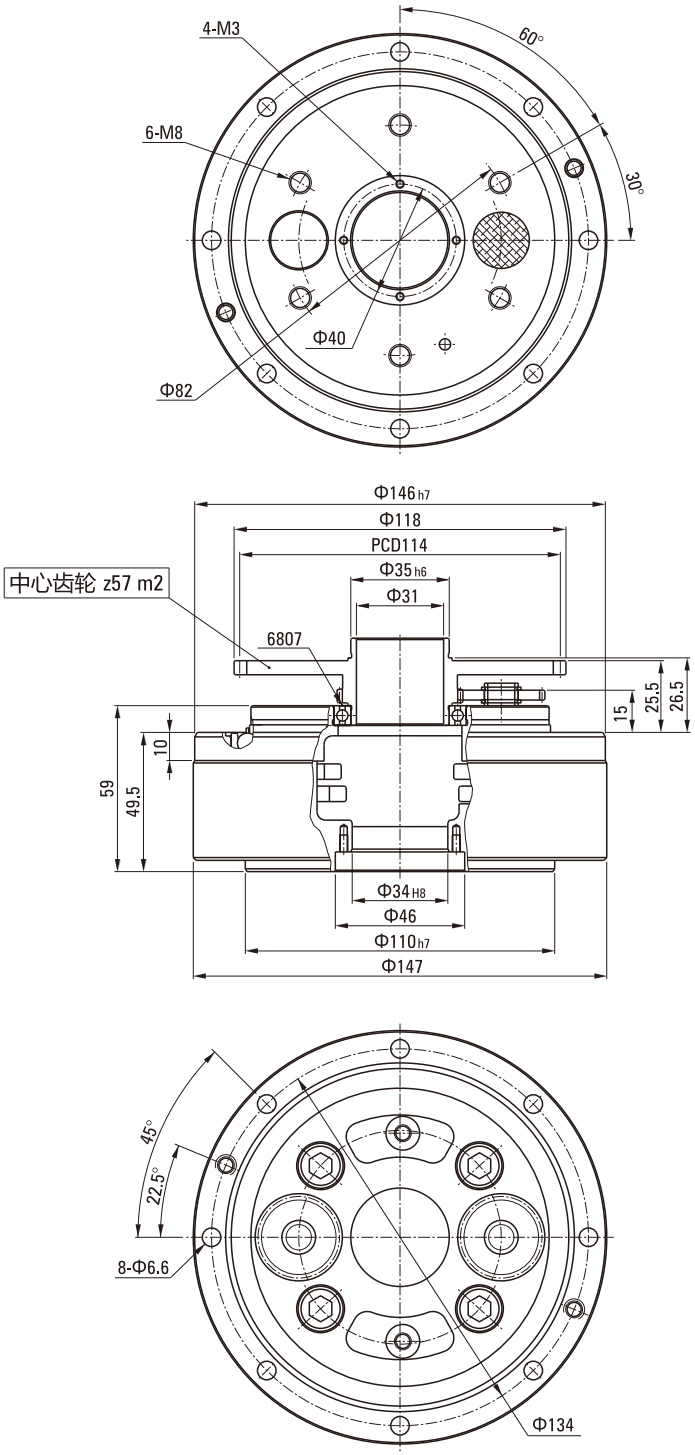

RVC系列外形尺寸图
RVC SERIES OUTLINE DIMENSION DRAWING

27CBX-RVC 外形图 27CBX-RVC Outline Drawing

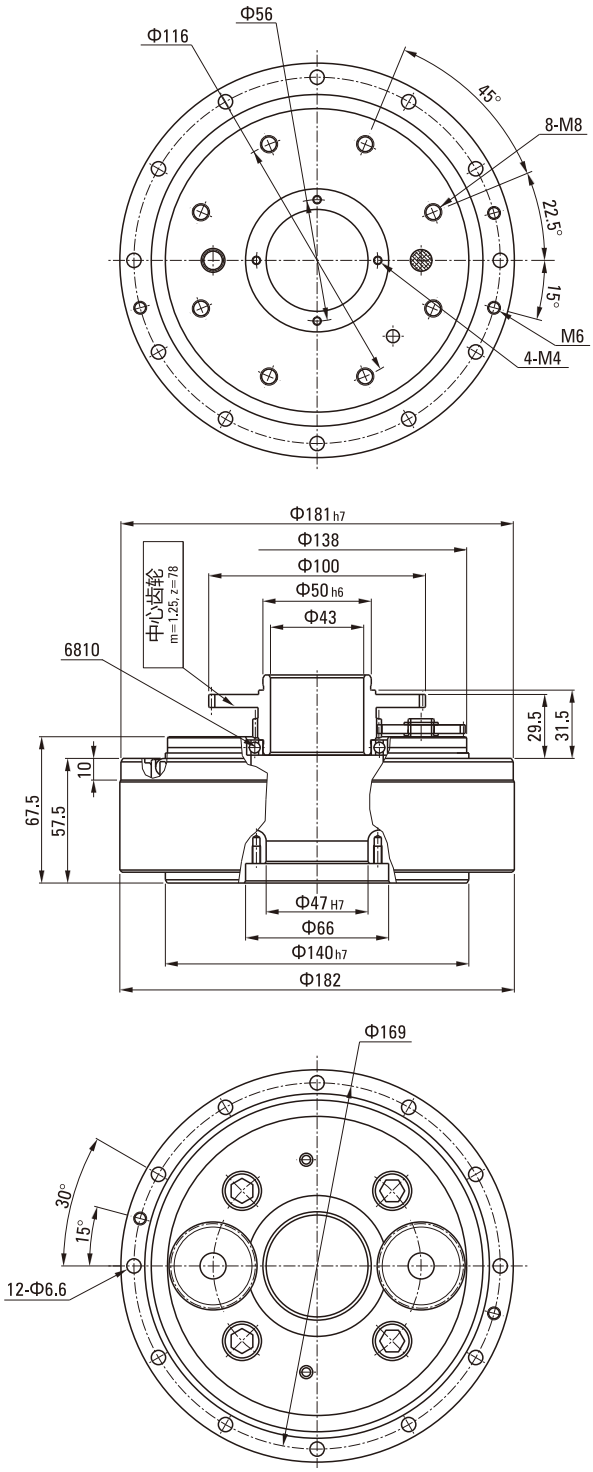

RVC系列外形尺寸图
RVC SERIES OUTLINE DIMENSION DRAWING

50CBX-RVC 外形图 50CBX-RVC Outline Drawing

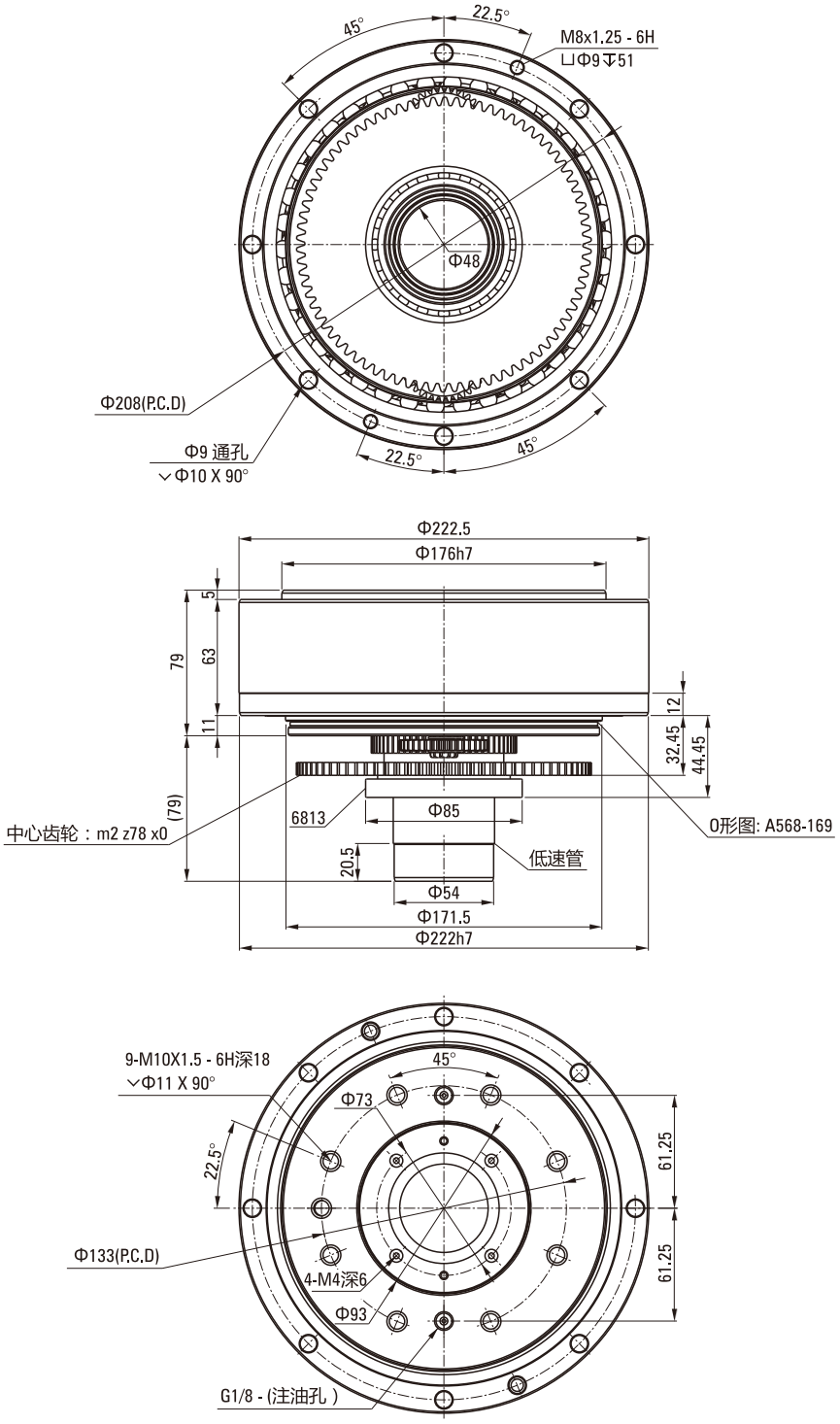

RVC系列外形尺寸图
RVC SERIES OUTLINE DIMENSION DRAWING

■100CBX-RVC 外形图 100CBX-RVC Outline Drawing

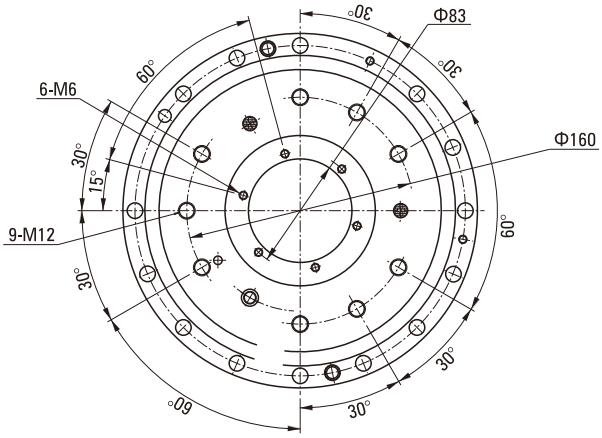

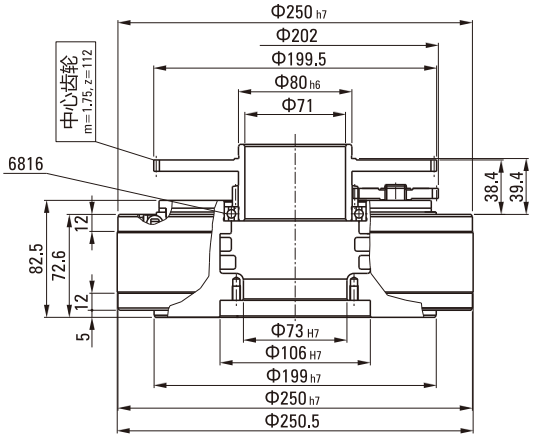

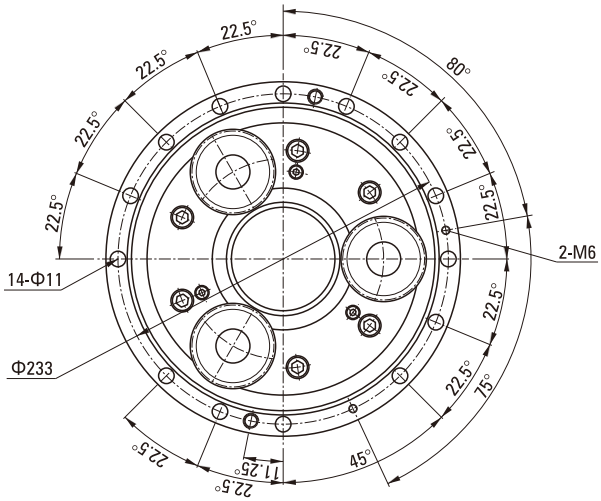

RVC系列外形尺寸图
RVC SERIES OUTLINE DIMENSION DRAWING

■120CBX-RVC-P 外形图 120CBX-RVC-P Outline Drawing

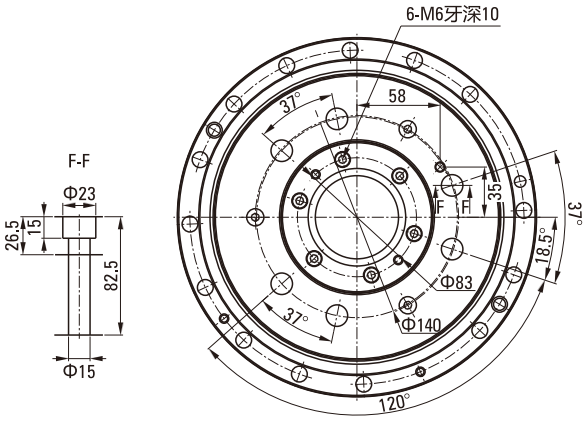

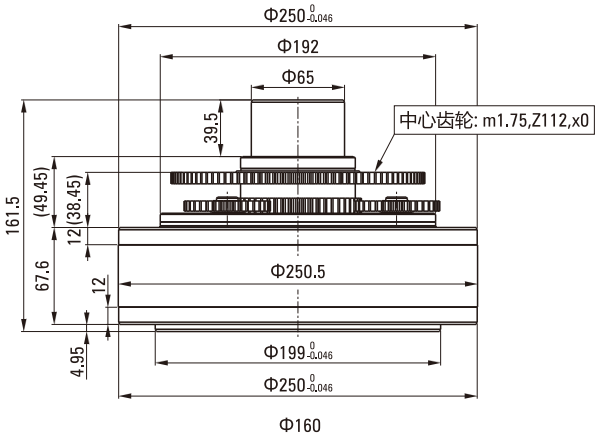

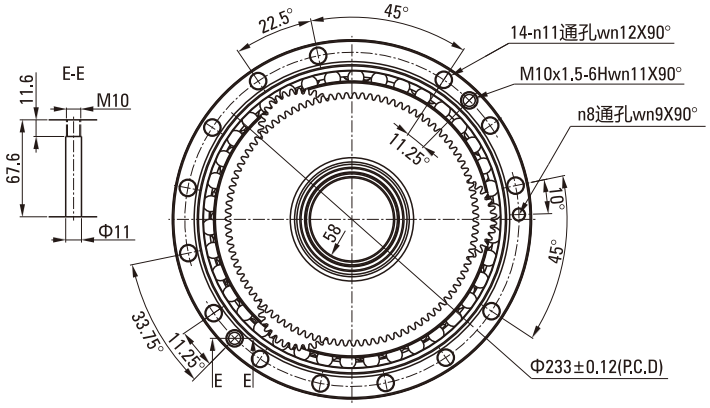

RVC系列外形尺寸图
RVC SERIES OUTLINE DIMENSION DRAWING

200CBX-RVC 外形图 200CBX-RVC Outline Drawing

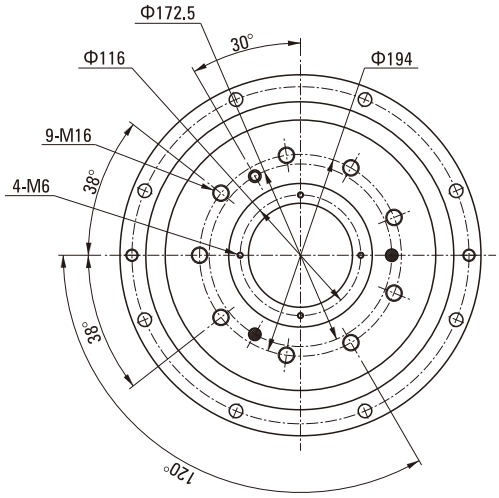

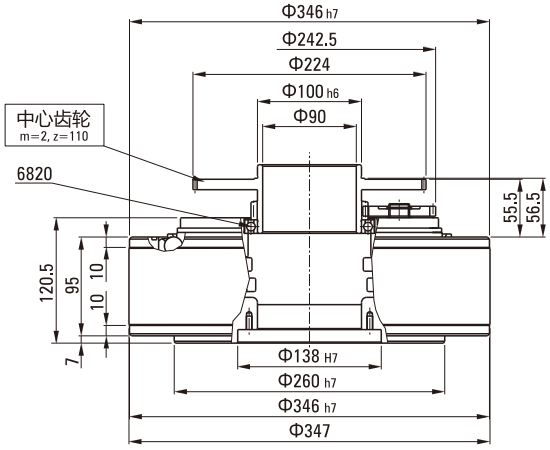

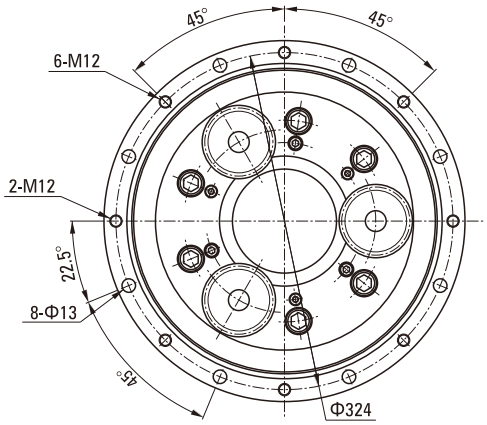

RVC系列外形尺寸图
RVC SERIES OUTLINE DIMENSION DRAWING

320CBX-RVC 外形图 320CBX-RVC Outline Drawing

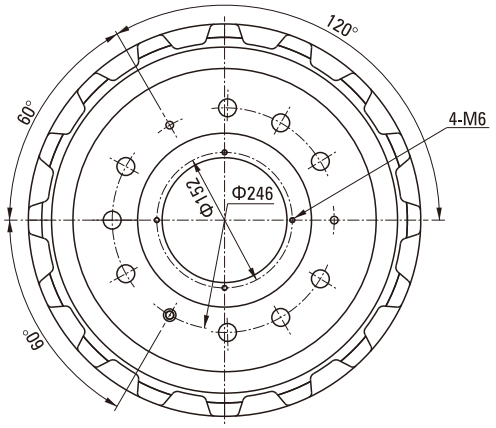

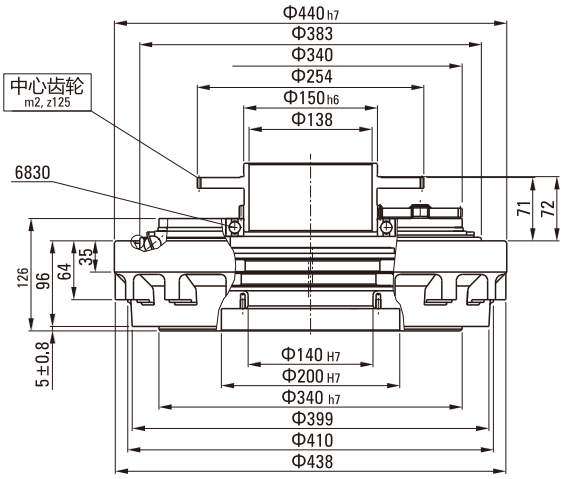

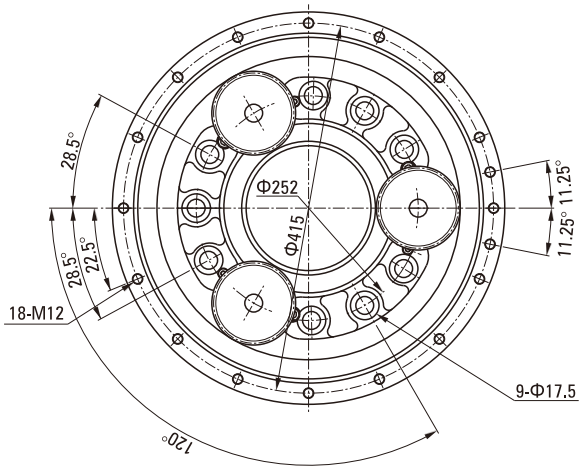

RVC系列外形尺寸图
RVC SERIES OUTLINE DIMENSION DRAWING

320CA–RVC 外形图 320CA-RVC Outline Drawing

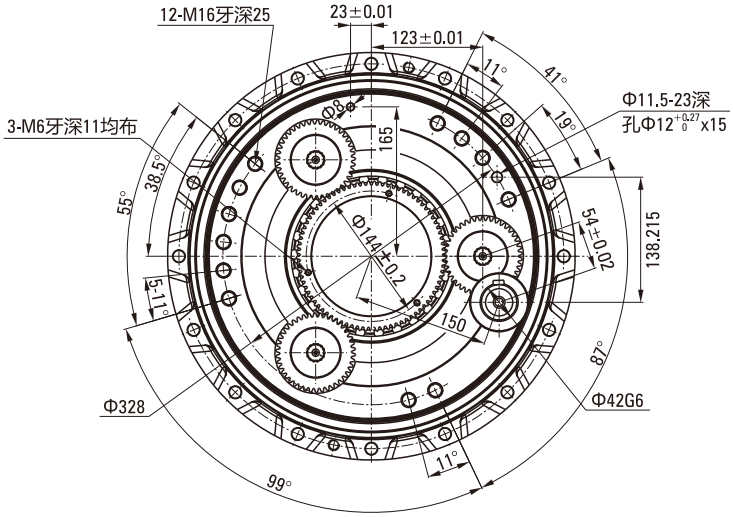

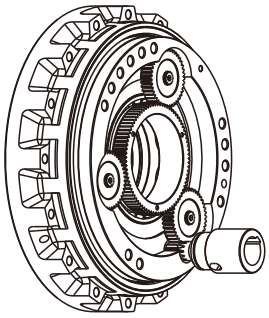

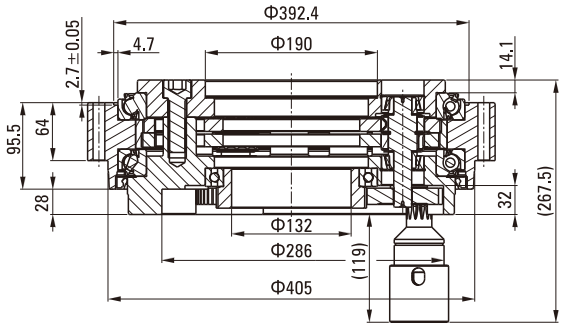

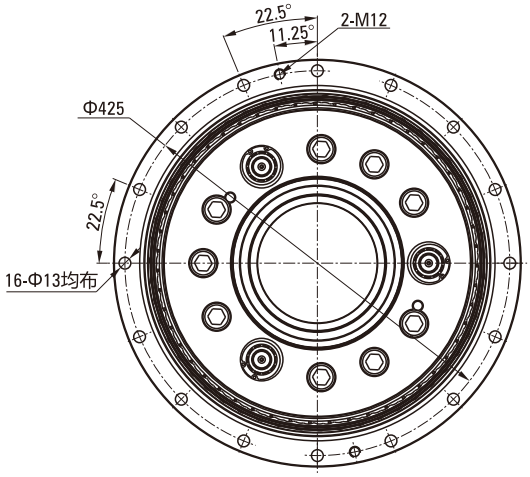

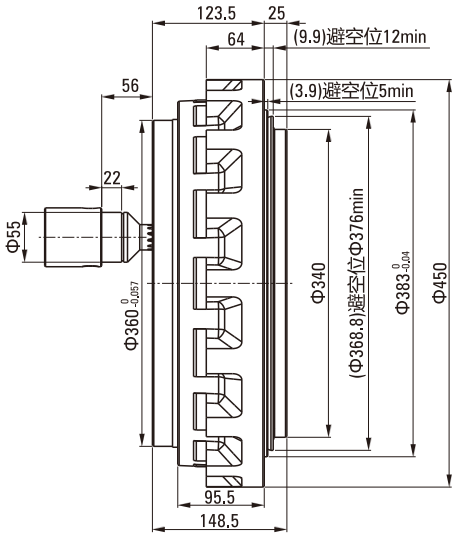

齿轮 Horizontal Installation	模数 Vertical Installation	齿数 Size A	变位系数 Size A
输入齿轮	2	12	+0.5
行星齿轮	2	42	+0.5
中心齿轮	2	81	+0.5

RVC系列外形尺寸图
RVC SERIES OUTLINE DIMENSION DRAWING

500CBX-RVC 外形图 500CBX-RVC Outline Drawing

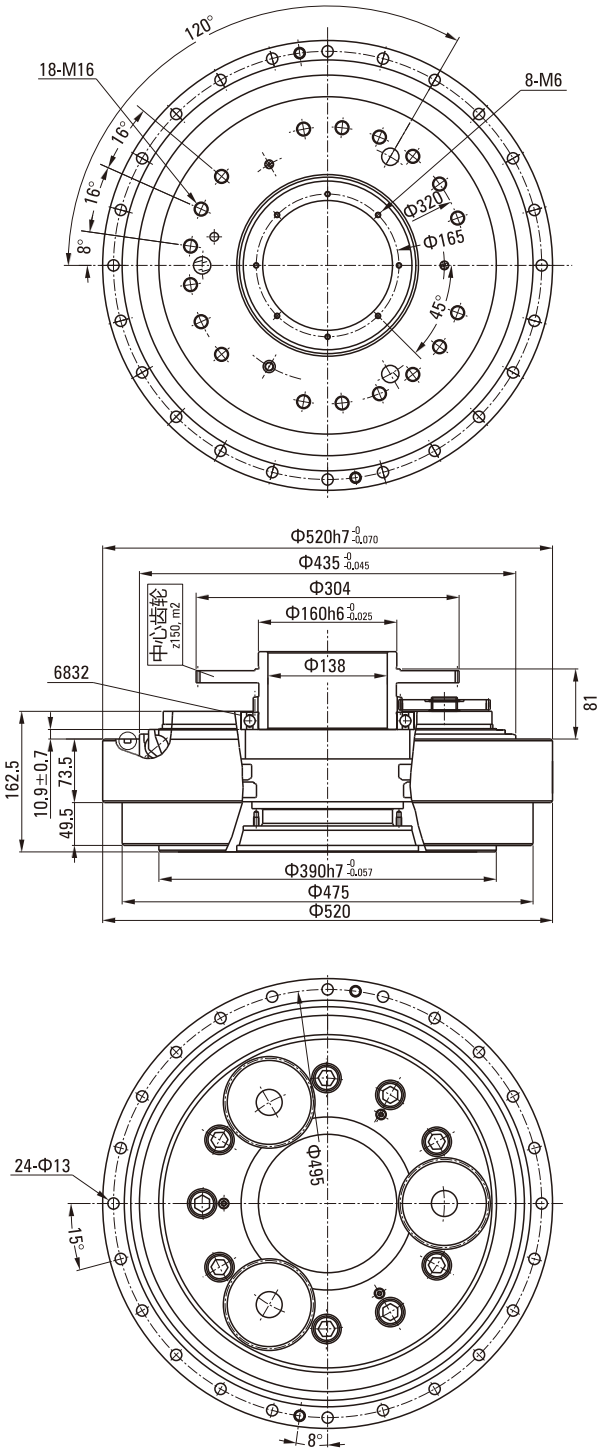

RVC型减速器安装要领
RVC TYPE REDUCER INSTALLATION GUIDE

为了充分发挥RVC型减速器的性能，对装配精度、安装方法、润滑以及必封进行最佳设计是十分重要的。
In order to make fully use of RVC type reducer, it is very important to do optimal design of assembly precision, installation method, lubrication.
请认真阅读以下注意事项。Please carefully read the following notes.

装配精度 Assembly Precision

RVC型减速器的安装侧部件请按附图D.1进行设计。如果装配不良会造成振动、噪声、齿隙等问题。

The installation of side components of RVC type reducers shall be designed based on drawing D.1. Poor assembly will cause shaking, noise and tooth gap, etc.

● **图 D.1: RVC系列装配精度** Figure D.1: RVC series assembly precision

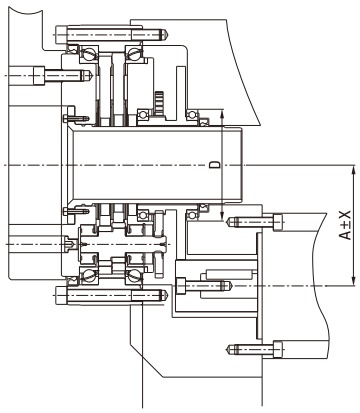

(A为减速机中心到电机中心的距离)
(A is the distance from the center of the speed reducer to the motor center)

装配要领 Assembly Method

- RVC型减速器安装在配套部件时的标准图例参见图D.2。装配时，请务必按指定量注入润滑脂。
  RVC type reducer installed on the supporting parts of standard legend for see figure D.2. When assembly, please be sure to inject the specified amount of grease.
- 图D.2，图D.3表示了"O"型圈的密封位置，因此请参照进行密封设计。
  Figure D.2, figure D.3 shows the "O" type of ring seal position, so please refer to the seal design.
- 结构上不能使用"O"型圈时，请使用表C.3的液体密封等密封剂。
  The structure can not be used "O" ring, please use the form C.3 liquid sealing sealant.

低速管装配示例 Example Of Low Speed Tube Assembly

低速管用于保护通过中空部位的电缆以及密封减速器内部的润滑脂。图D.2是低速管的安装参考示例。

Low speed tube for protection through the hollow part of the cable and the lubrication grease inside the seal reducer. Figure D.2 is a reference example for the installation of a low speed tube.

输出轴螺栓紧固装配示例：图D.3
Output Shaft Bolt Fastening Assembly Example: Figure D.3

● **表 D.1: RVC系列装配精度尺寸表** Table D.1: RVC series assembly precision size table

(单位 Unit: mm)

项目 Item / 型号 Model	中心间距离公差 Center Distance Tolerance X	同心度公差 Concentric Tolerance a	平行度公差 Parallelism Tolerance b
10CBX-RVC	±0.03	Max 0.03	Max 0.03
27CBX-RVC			
50CBX-RVC			
100CBX/120CBX-RVC			
200CBX-RVC			
320CBX-RVC			
500CBX-RVC			

● **图 D.2: 装配示例** Figure D.2: Assembly example

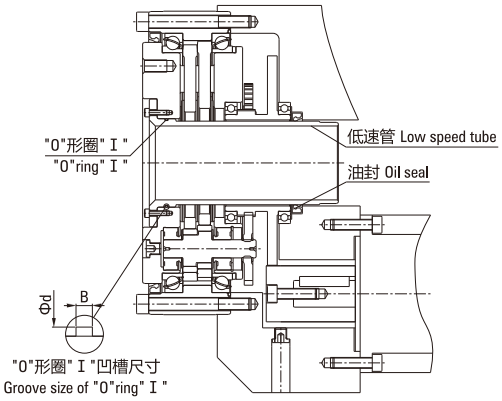

● **图 D.3: 装配示例** Figure D.3: Assembly example

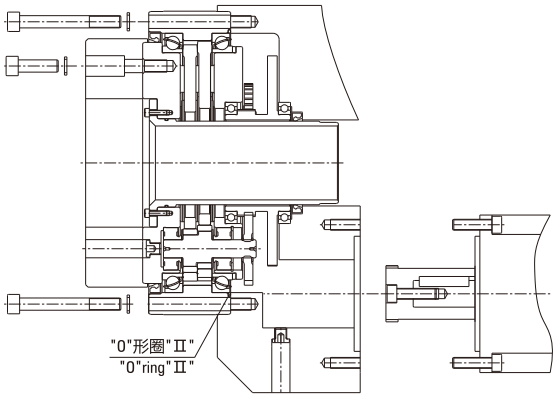

● **表D.2: “O”型圈（Ⅰ）密封尺寸表（mm）:** Table D.2: "O" - shaped ring (I) sealing size table (mm)

代号 Code \ 机型 Model		10CBX-RVC	27CBX-RVC	50CBX-RVC	100CBX/120CBX-RVC	200CBX-RVC	320CBX-RVC	500CBX-RVC
O形圈 O ring	公称号码 Nominal number	CO-0625	CO-0634	CO-0643	S70	G95	G135	G145
	线径 Wire diameter	Φ2.40	Φ2.40	Φ3.50	Φ2.00	Φ3.10	Φ3.10	Φ3.10
	内径 Internal diameter	Φ29.7	Φ42.2	Φ59.6	Φ69.5	Φ94.4	Φ134.4	Φ144.4
凹槽尺寸 Groove size	内径d Internal diameter d	Φ30.2	Φ43.2	Φ60.3	Φ70.0	Φ95.0	Φ135.0	Φ145.0
	宽度B Width B	3.2	3.2	4.7	2.7	4.1	4.1	4.1

● **表D.3: “O”型圈（Ⅱ）:** Table D.3: "O" - shaped ring (II)

机型 Model	适用"O"型圈 Apply The "O" Shape Ring
10CBX-RVC	AS568-048
27CBX-RVC	AS568-163
50CBX-RVC	AS568-169
100CBX/120CBX-RVC	AS568-173
200CBX-RVC	AS568-277
320CBX-RVC	AS568-281
500CBX-RVC	B2401-G460

输出轴通孔螺栓坚固型装配，请询问公司相关技术人员。

Output shaft through hole bolt solid assembly, please ask the company related technical personnel.

中心齿轮、输入齿轮 Central Gear, Input Gear

● **中心齿轮、输入齿轮的精度** Center gear, input gear precision

如果中心齿轮、输入齿轮的精度不良，就会产生噪声、齿隙，所以需要按以下精度进行设计。

If the center gear, the input gear's precision is bad, can produce the noise, the tooth gap, therefore needs to carry on the design according to the following precision.

表D.4 中心齿轮、输入齿轮的精度。

Table D.4 center gear, the accuracy of the input gear.

● **图 D.4: 中心齿轮、输入齿轮的精度**

Figure D.4: Center gear, input gear precision

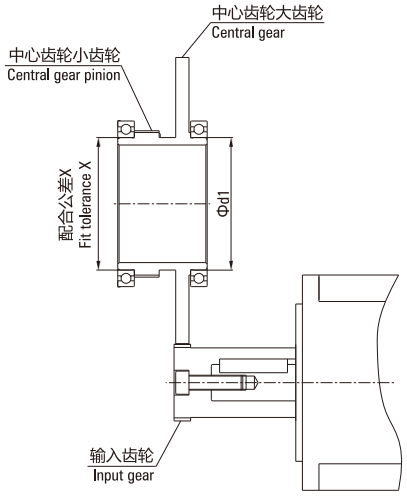

● **表D.4: 中心齿轮、输入齿轮的精度** Table D.4: Center gear, input gear precision

配合公差 Fit Tolerance X	同心度公差 Concentric Tolerance a	中心齿轮小齿轮 Central Gear Pinion 精度等级 Precision Grade	中心齿轮大齿轮 Central Gear 精度等级 Precision Grade	输入齿轮 Input Gear 精度等级 Precision Grade
h6	Max 0.03	GB/T10095 8级 level	GB/T10095 7级 level	GB/T10095 8级 level

● **表D.5: 输入齿轮与中心齿轮大齿轮的齿隙（公法线）** Table D.5: Gear gap of the input gear and the big gear of the central gear (Normal line)

机型 Model	齿隙(公法线) Tooth Gap (Common Law) (mm)
10CBX-RVC	0.035～0.090
27CBX-RVC	0.040～0.110
50CBX-RVC	0.050～0.130
100CBX/120CBX-RVC	0.060～0.140
200CBX-RVC	0.075～0.180
320CBX-RVC	
500CBX-RVC	

● **表D.6: 中心齿轮小齿轮的齿轮参数**

Table D.6: Gear parameters of central gear pinion

机型 Model	齿轮模数 Gear Modulus m	齿轮 Gear z	变位系数 Coefficient Of Variation x
10CBX-RVC	1.00	48	-0.04
27CBX-RVC	1.00	57	+0.2
50CBX-RVC	1.25	61	0
100CBX/120CBX-RVC	1.75	48	+0.3
200CBX-RVC	2.50	43	0
320CBX-RVC	2.00	78	0
500CBX-RVC	2.00	83	0

● **标准中心齿轮** Standard center gear

RVC型减速器备有标准中心齿轮。如果需要标准中心齿轮，请在订购时指定。表D.7为标准中心齿轮大齿轮的齿轮参数。

RVC type gear reducer with standard center gear. If you need a standard center gear, please specify when ordering. Table D.7 gear parameters of the standard center gear.

● **表D.7: 标准中心齿轮大齿轮的齿轮参数**

Table D.7: Gear parameters of standard center gear

机型 Model	齿轮模数 Gear Modulus m	齿轮 Gear z	变位系数 Coefficient Of Variation x
10CBX-RVC	2.00	57	0
27CBX-RVC	1.25	78	0
50CBX-RVC	2.00	78	0
100CBX/120CBX-RVC	1.75	112	0
200CBX-RVC	2.00	110	0
320CBX-RVC	2.00	125	0
500CBX-RVC	2.00	150	0

润滑 lubrication

- 减速器在出厂时未填充润滑脂，因此在安装减速器时，请务必根据所需填充量填充建议的润滑剂。
  Reducer in the factory is not filled with grease, so in the installation of the reducer, be sure to fill according to the required amount of filling the recommended lubricant.
- 减速器的润滑剂填充量一般占内部空间的70~90%，请确保有10%左右的空间未注满。
  Reducer lubricant filling amount accounts for the interior space of the 70~90%, please make sure that there are about 10% of the space is not filled up.
- 减速器安装设计时请注意需要二个注油孔，需要密封及方便加注油脂，排出油脂。
  Please note that the design of reducer installation needs two oil filling hole, need to seal and convenient oil filling, discharge of oil.
- 减速器封入油脂后，一般更换油脂时间为2000小时左右，请定期检查润滑脂的老化、污染情况，并规定更换时间。
  Reducer sealed grease, the general replacement of oil time is about 2000 hours, please regularly check the grease of aging, pollution, and the provisions of replacement time.

● **图 D.6: 润滑油注入位置(水平)**

Figure D.6: Lubricating oil injection position (Horizontal)

(安装水平轴 Install horizontal axis)

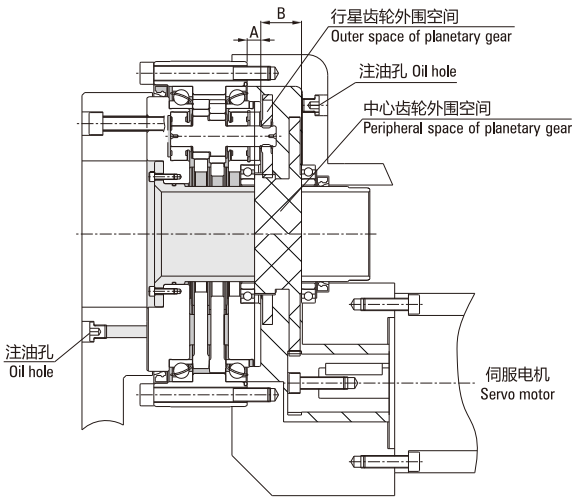

螺栓的紧固转扭 Tightening Torque Of Bolts

RVC型减速器使用内六角螺栓，请按表C.4的紧固转矩进行紧固，螺栓请使用碟形弹簧垫圈，防止螺栓松动及擦伤螺栓座面。

RVC type reducer using the six angle bolt, according to the table C.4 fastening torque for fastening, bolts, please use the disc spring washer, to prevent bolt loose and scratch the bolt seat.

安装输入齿轮 Install Input Gear

图D.5: 表示伺服电机轴的形状和输入齿轮的安装示例，请参照此图进行设计。

Figure D.5: Indicates the shape of the servo motor shaft and the installation of the input gear sample, please refer to this diagram for design.

● **图 D.5: 输入齿轮装配** Figure D.5: Input gear assembly

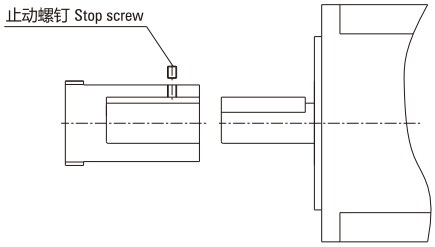

电机轴没有螺孔 No screw motor shaft

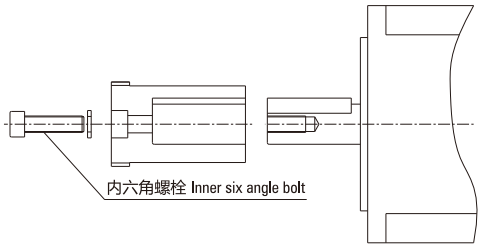

电机轴有螺孔 The motor shaft with a screw hole

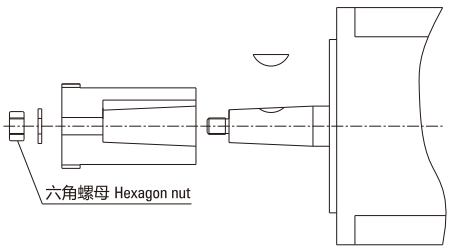

电机轴为锥形轴且带螺栓 The motor shaft is a conical shaft and is provided with a bolt

● **图 D.7: 润滑油注入位置(垂直)** Figure D.7: Lubricating oil injection position (Vertical)

(安装垂直轴-1 Install vertical axis-1)

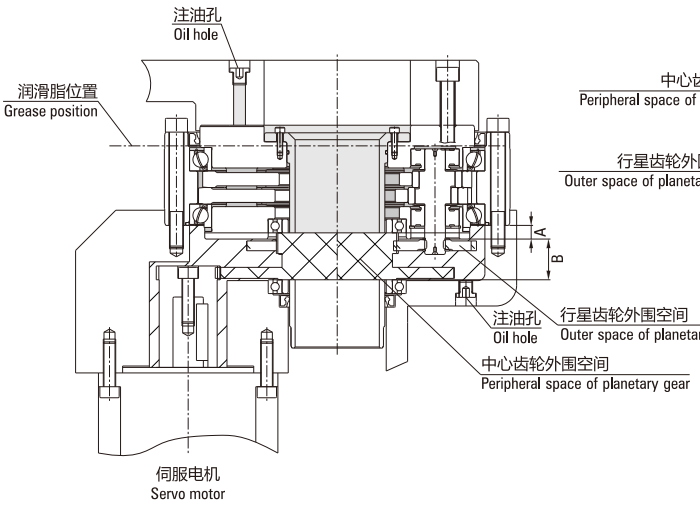

(安装垂直轴-2 Install vertical axis-2)

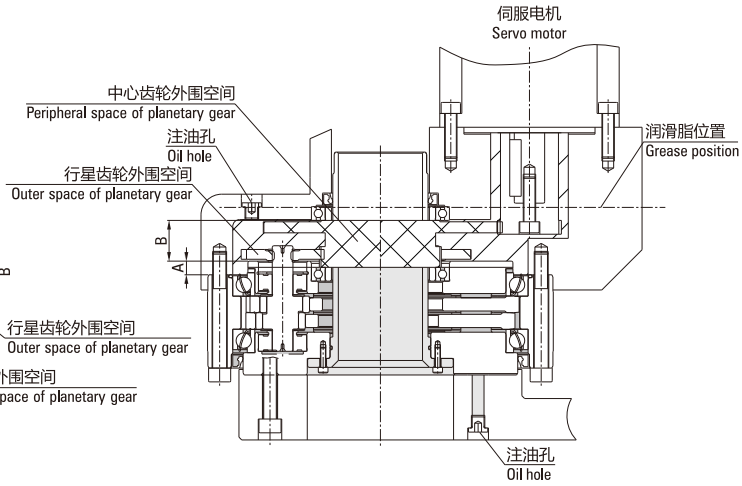

● **表D.8: 润滑脂填充量** Table D.8: Grease filling amount

机型 Model	安装水平轴 (CC) Install Horizontal Axis	安装垂直轴 (CC) Install Vertical Axis	尺寸 Size A (mm)	尺寸 Size A (mm)	行星齿轮外围填充量 (cc)	中心齿轮外围填充量 (cc)
10CBX-RVC	147	167	9.50	16.85	4	70
27CBX-RVC	266	305	10.0	21.35	10	83
50CBX-RVC	498	571	11.0	23.35	21	208
100CBX/120CBX-RVC	756	857	9.90	29.45	57	369
200CBX-RVC	1831	2076	18.5	37.70	93	642
320CBX-RVC	3536	4047	25.0	46.75	197	1275
500CBX-RVC	5934	6900	32.0	49.70	310	1803

保修 Guarantee

保修期及保修范围规定如下。 The warranty period and the scope of the warranty provisions are as follows.

● **保修期** Warranty period

在产品目录中记载的正常组装状态及润滑状态下使用的前提下，保修期为交货后的一年时间或该产品运行时间达到2000小时两者中最先达到的时间。

In the product catalog records of the normal assembly and lubrication under the condition of the use of the premise, the warranty period for the delivery of a year or the product running time of 2000 hours to reach the first time between the two.

● **保修范围** Warranty coverage

在上述保修期内，因本公司产品缺陷导致故障时，由本公司负责对本产品进行维修或更换。

During the warranty period, the company shall be responsible for the maintenance or replacement of the product as a result of the failure of the company's product defects.

但以下情况不在保修范围内。

But the following conditions are not within the scope of the warranty.

❶ 因客户不当操作或使用导致故障的	Failure due to improper operation or use of the customer
❷ 非本公司实施的改造或修理导致故障的	Non the company's implementation of the transformation or repair of the failure of the
❸ 非本产品原因导致故障的	Non product causes of failure
❹ 其它天灾等非本公司责任导致故障的	Other natural disasters and other non liability of the company led to the failure of

而且，这里所说的保修是指对本产品的保修。

Moreover, the warranty here refers to the warranty for this product.

对于因本产品故障引发的其它损失、与设备上拆装相关的工时、费用等，不在本公司负责范围内。

For other losses caused by the failure of this product, and the equipment on the dismantling of the hours, costs, etc., are not responsible for the company.

REA系列外形尺寸图
REA SERIES OUTLINE DIMENSION DRAWING

120BX-REA2 外形图 120BX-REA2 Outline Drawing

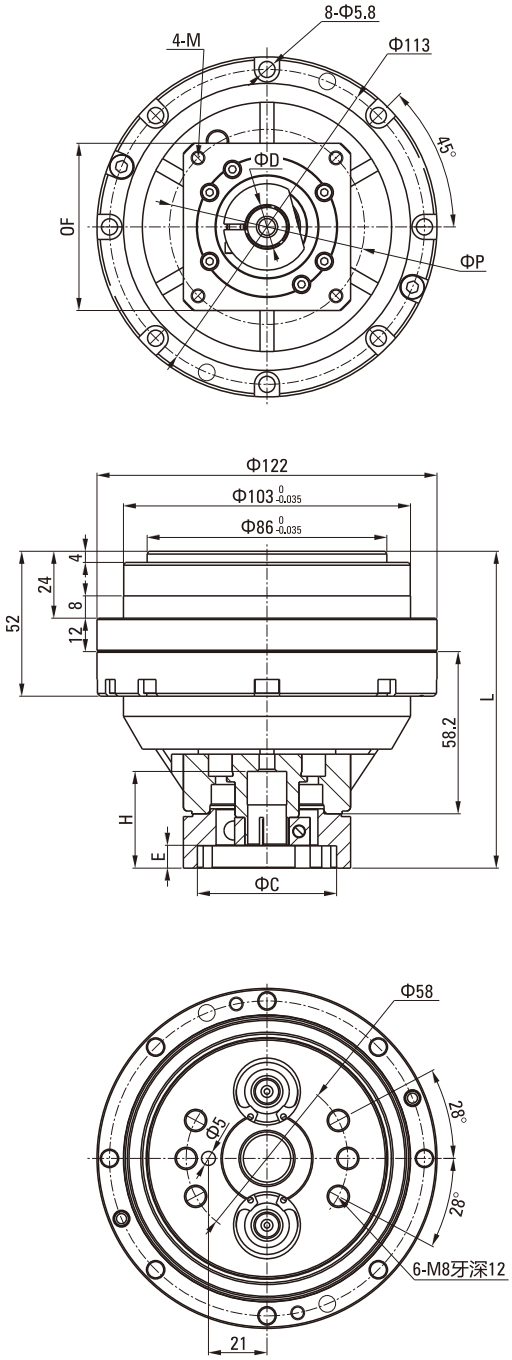

马达种类 Type Motor	M41	M42
C	50	50
D	11/14	11/14
E	8	8
F	60	60
H	34	34
L	113.7	113.7
M	M4	M5
P	70	70

说明 Note:

1. 本图适用电机轴: <=14；电机轴用锁紧器锁紧。This figure applies to the motor shaft: <=14; motor shaft lock use locker.
2. 减速机速比: (31,43,53.5,59,79,103):1 (轴输出)。Speed reduction ratio: (31,43,53.5,59,79,103): 1 (shaft output).
3. 润滑油脂: VIGO GREASE RE0 或 RE-00 (MOLYWHITE)。Lubricants: VIGO GREASE RE0 or RE-00 (MOLYWHITE).
4. 额定输出扭矩: 58N.m (输出转速: 15R/Min)。Rated output torque: 58N.m (output speed: 15R/Min).
5. 电机安装法兰依电机型号提供。Motor mounting flange according to motor model.

REA系列外形尺寸图
REA SERIES OUTLINE DIMENSION DRAWING

150BX-REA2 外形图 150BX-REA2 Outline Drawing

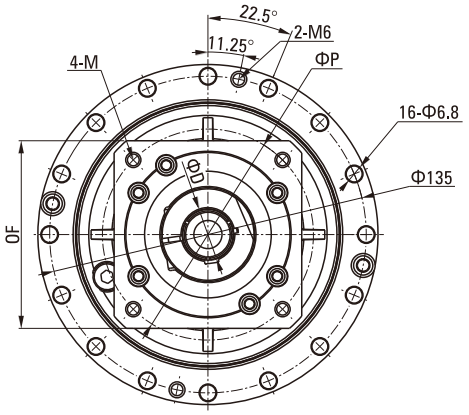

马达种类 Type Motor	M59A	M59B
C	50	50
D	14	14
E	5	5
F	80	80
H	35	35
K	-	-
L	123	123
L (41,57K)	113	113
M	M4	M5
P	70	70

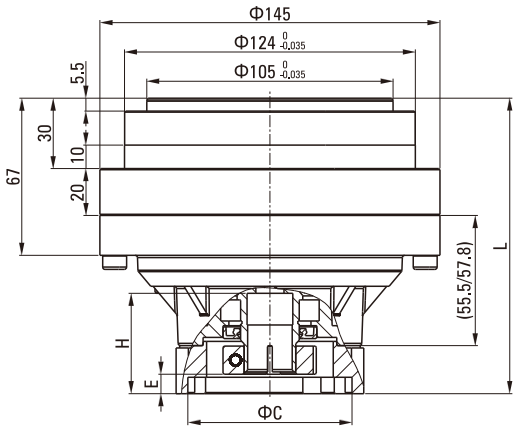

马达种类 Type Motor	M51	M52
C	70	70
D	19	19
E	8	8
F	80	80
H	45	45
K	6	6
L	128.3	128.3
L (41,57K)	-	-
M	M5	M6
P	90	90

马达种类 Type Motor	M53	M51
C	80	70
D	19	19
E	8	8
F	90	80
H	45	42
K	6	无键型
L	128.3	126
L (41,57K)	-	116
M	M6	M5
P	100	90

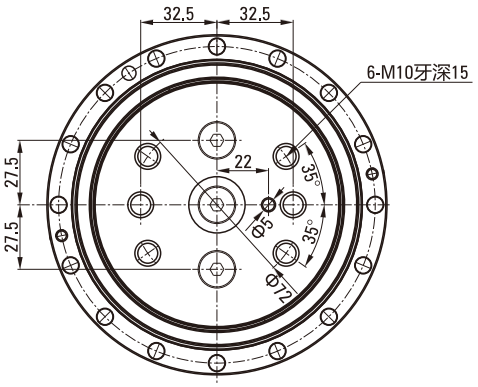

马达种类 Type Motor	M52	M53
C	70	80
D	19	19
E	8	8
F	80	90
H	42	42
K	无键型	无键型
L	126	126
L (41,57K)	116	116
M	M6	M6
P	90	100

说明 Note:

1. 本图适用电机轴: <=19x40L；电机轴用锁紧器锁紧。This figure applies to the motor shaft: <=19x40L; motor shaft lock use locker.
2. 减速机速比: (41,57,81,105,121,141,161):1 (轴输出)。Speed reduction ratio: (41,57,81,105,121,141,161): 1 (shaft output).
3. 润滑油脂: VIGO GREASE RE0 或 RE-00 (MOLYWHITE)。Lubricants: VIGO GREASE RE0 or RE-00 (MOLYWHITE).
4. 额定输出扭矩: 196N.m (输出转速: 15R/Min)。Rated output torque: 196N.m (output speed: 15R/Min).
5. 电机安装法兰依电机型号提供。Motor mounting flange according to motor model.

REA系列外形尺寸图
REA SERIES OUTLINE DIMENSION DRAWING

35BX–REA2 外形图 35BX-REA2 Outline Drawing

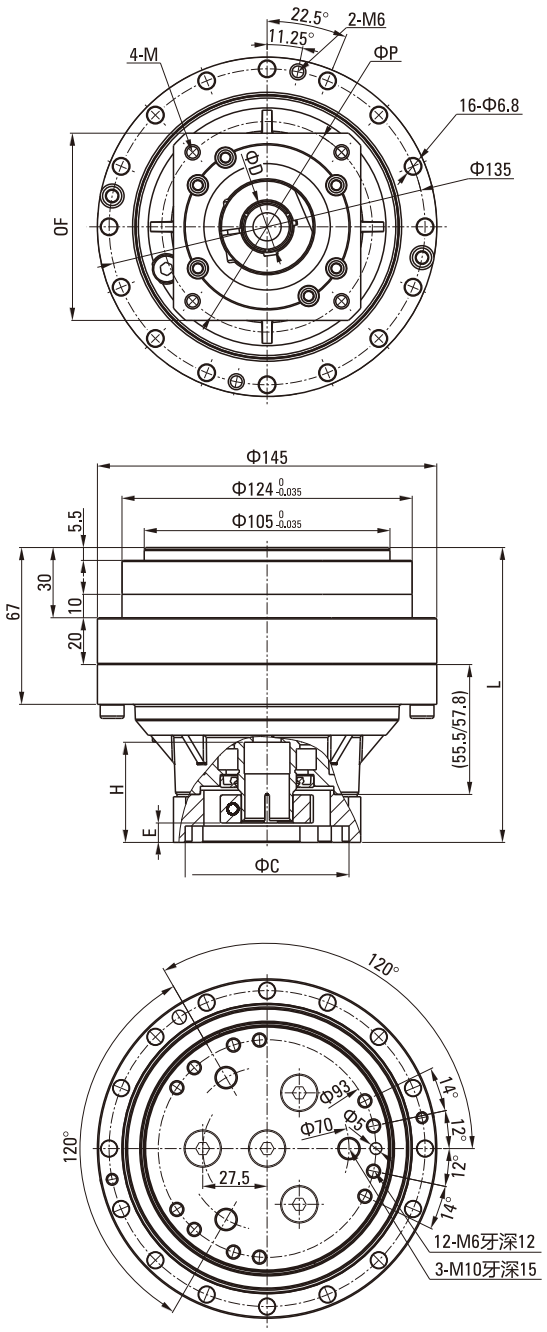

马达种类 Type Motor	M59A	M59B
C	50	50
D	14	14
E	5	5
F	80	80
H	35	35
K	-	-
L	123	123
L (41,57K)	113	113
M	M4	M5
P	70	70

马达种类 Type Motor	M51	M52
C	70	70
D	19	19
E	8	8
F	80	80
H	45	45
K	6	6
L	128.3	128.3
L (41,57K)	-	-
M	M5	M6
P	90	90

马达种类 Type Motor	M53	M51
C	80	70
D	19	19
E	8	8
F	90	80
H	45	42
K	6	无键型
L	128.3	126
L (41,57K)	-	116
M	M6	M5
P	100	90

马达种类 Type Motor	M52	M53
C	70	80
D	19	19
E	8	8
F	80	90
H	42	42
K	无键型	无键型
L	126	126
L (41,57K)	116	116
M	M6	M6
P	90	100

说明 Note:

1. 本图适用电机轴: <=19x40L。This figure applies to the motor shaft: <=19x40L.
2. 减速机速比: (41,57,81,105,121,141,161):1 (轴输出)。Speed reduction ratio: (41,57,81,105,121,141,161): 1 (shaft output).
3. 润滑油脂: VIGO GREASE RE0 或 RE-00 (MOLYWHITE)。Lubricants: VIGO GREASE RE0 or RE-00 (MOLYWHITE).
4. 额定输出扭矩: 254N.m (输出转速: 15R/Min)。Rated output torque: 254N.m (output speed: 15R/Min).
5. 电机安装法兰依电机型号提供。Motor mounting flange according to motor model.

REA系列外形尺寸图
REA SERIES OUTLINE DIMENSION DRAWING

190BX-REA2 外形图 190BX-REA2 Outline Drawing

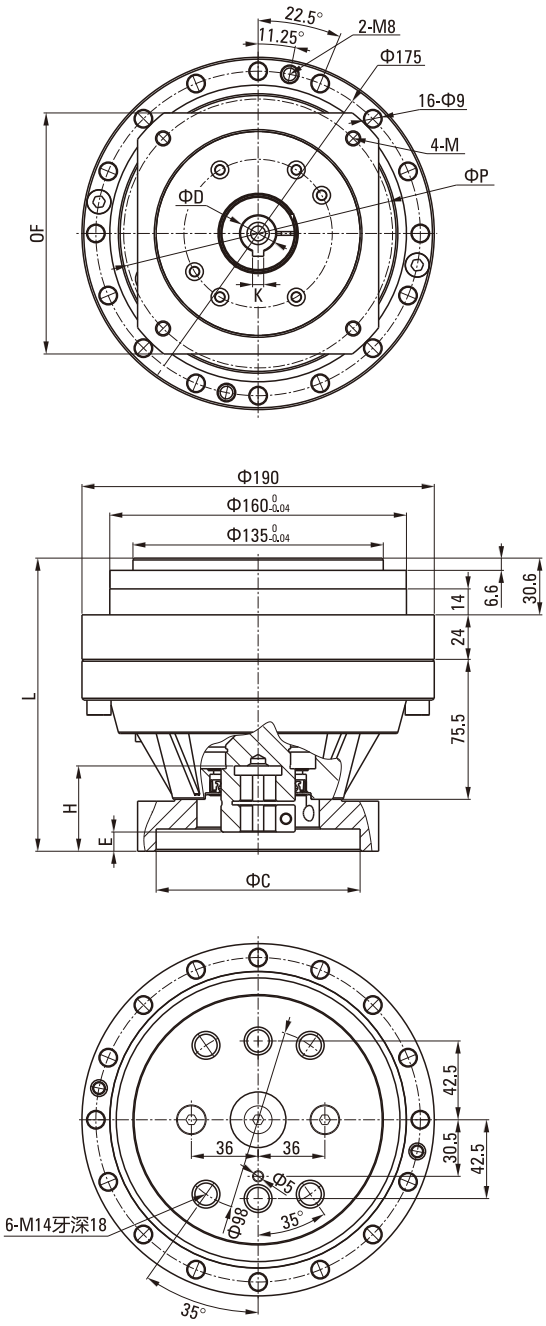

马达种类 Type Motor	M59A	M59B
C	50	50
D	14	14
E	8	8
F	80	80
H	35	35
K	-	-
L	147.6	147.6
L (41,57K)	147.6	147.6
M	M4	M5
P	70	70

马达种类 Type Motor	M72	M73
C	110	95
D	19/22	19
E	20	7
F	130	100
H	58	48
K	6/8	6
L	170.1	162.1
L (41,57K)	165.1	155.1
M	M8	M6
P	145	115

马达种类 Type Motor	M74	M75
C	95	95
D	19/22	19/22
E	7	10
F	100	110
H	48	52
K	6/8	6/8
L	162.1	165.1
L (41,57K)	155.1	158.1
M	M8	M8
P	115	130

马达种类 Type Motor	M77	M78
C	80	70
D	19	19
E	10	8
F	90	80
H	40	40
K	6	6
L	158.1	156.1
L (41,57K)	150.1(M51/52/53)	
M	M6	M6
P	100	90

说明 Note:

1. 本图适用电机轴: <=24；电机轴用锁紧带键一体轴。This figure applies to the motor shaft: <=24; motor shaft lock use locker.
2. 减速机速比: (41,57,81,105,121,153):1 (轴输出)。Speed reduction ratio: (41,57,81,105,121,153): 1 (shaft output).
3. 润滑油脂: VIGO GREASE RE0 或 RE-00 (MOLYWHITE)。Lubricants: VIGO GREASE RE0 or RE-00 (MOLYWHITE).
4. 额定输出扭矩: 392N.m (输出转速: 15R/Min)。Rated output torque: 392N.m (output speed: 15R/Min).
5. 电机安装法兰依电机型号提供。Motor mounting flange according to motor model.

REA系列外形尺寸图
REA SERIES OUTLINE DIMENSION DRAWING

65BX-REA 外形图 65BX-REA Outline Drawing

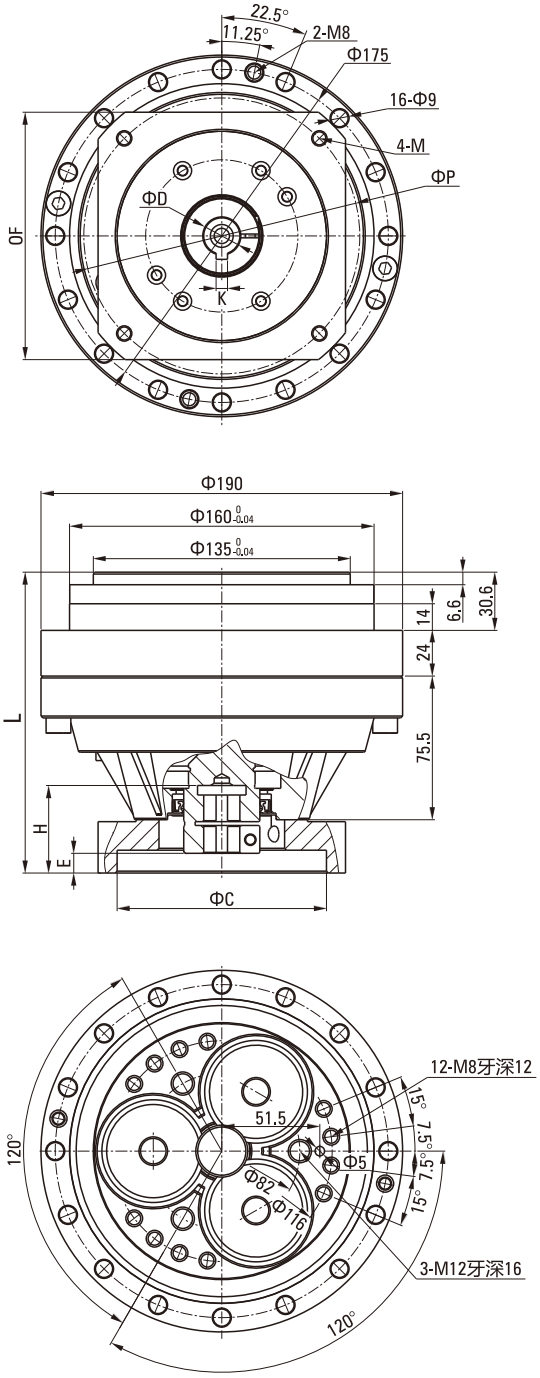

马达种类 Type Motor	M59A	M59B
C	50	50
D	14	14
E	8	8
F	80	80
H	35	35
K	-	-
L	147.6	147.6
L (41,57K)	147.6	147.6
M	M4	M5
P	70	70

马达种类 Type Motor	M72	M73
C	110	95
D	19/22	19
E	20	7
F	130	100
H	58	48
K	6/8	6
L	170.1	162.1
L (41,57K)	165.1	155.1
M	M8	M6
P	145	115

马达种类 Type Motor	M74	M75
C	95	95
D	19/22	19/22
E	7	10
F	100	110
H	48	52
K	6/8	6/8
L	162.1	165.1
L (41,57K)	155.1	158.1
M	M8	M8
P	115	130

马达种类 Type Motor	M77	M78
C	80	70
D	19	19
E	10	8
F	90	80
H	40	40
K	6	6
L	158.1	156.1
L (41,57K)	150.1(M51/52/53)	
M	M6	M6
P	100	90

说明 Note:

1. 本图适用电机轴: <=24；电机轴用锁紧带键一体轴。This figure applies to the motor shaft: <=24; motor shaft lock use locker.
2. 减速机速比: (41,57,81,105,121,153):1 (轴输出)。Speed reduction ratio: (41,57,81,105,121,153): 1 (shaft output).
3. 润滑油脂: VIGO GREASE RE0 或 RE-00 (MOLYWHITE)。Lubricants: VIGO GREASE RE0 or RE-00 (MOLYWHITE).
4. 额定输出扭矩: 575N.m (输出转速: 15R/Min)。Rated output torque: 575N.m (output speed: 15R/Min).
5. 电机安装法兰依电机型号提供。Motor mounting flange according to motor model.

REA系列外形尺寸图
REA SERIES OUTLINE DIMENSION DRAWING

220BX-REA2 外形图 220BX-REA2 Outline Drawing

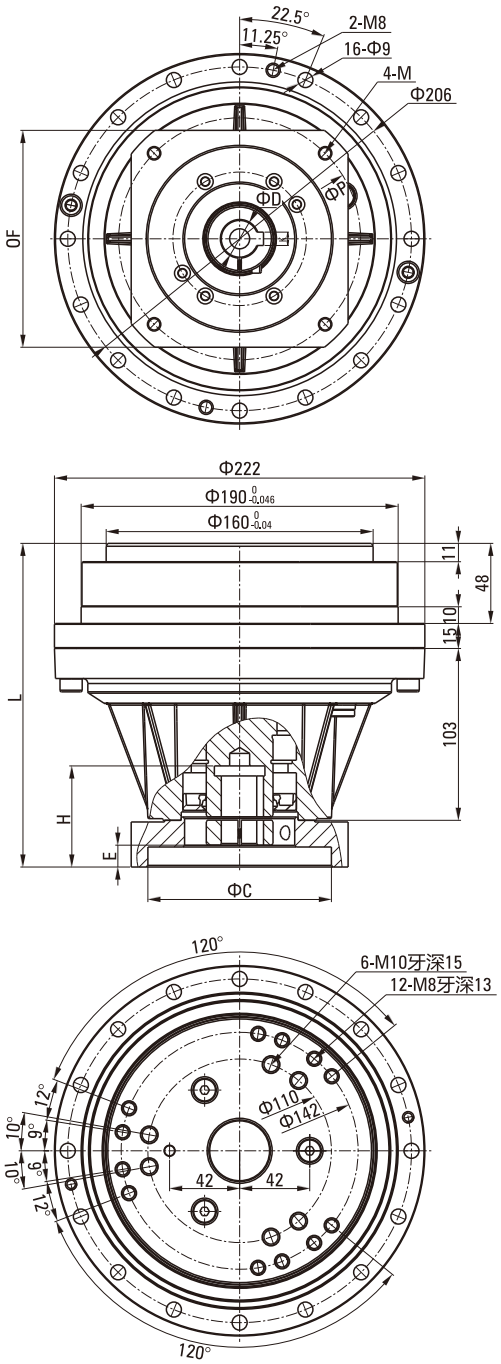

马达种类 Type Motor	M71	M73
C	110	95
D	19/22/24	19
E	13	10
F	130	100
H	60	57
K	6/8	6
L	194	191
M	M8	M6
P	145	115

马达种类 Type Motor	M74	M75
C	95	95
D	19/22	19/22/24
E	10	13
F	100	110
H	57	60
K	6/8	6/8
L	191	194
M	M8	M8
P	115	130

马达种类 Type Motor	M76	M77
C	130	80
D	19/22	19
E	13	10
F	142	90
H	60	60
K	6/8	6
L	194	194
M	M10	M6
P	165	100

马达种类 Type Motor	M78	M81
C	70	114.3
D	19	28/35
E	11	27.5
F	80	175
H	58	82
K	6	8/10
L	192	208
M	M6	M8
P	90	200

说明 Note:

1. 本图适用电机轴: <=24x70L；电机轴用锁紧器锁紧。This figure applies to the motor shaft: <=24x70L; motor shaft lock use locker.
2. 减速机速比: (57,81,101,121,153):1 (轴输出)。Speed reduction ratio: (57,81,101,121,153): 1 (shaft output).
3. 润滑油脂: VIGO GREASE RE0 或 RE-00 (MOLYWHITE)。Lubricants: VIGO GREASE RE0 or RE-00 (MOLYWHITE).
4. 额定输出扭矩: 784N.m (输出转速: 15R/Min)。Rated output torque: 784N.m (output speed: 15R/Min).
5. 电机安装法兰依电机型号提供。Motor mounting flange according to motor model.

REA系列外形尺寸图
REA SERIES OUTLINE DIMENSION DRAWING

220BX-REA-35 外形图 220BX-REA-35 Outline Drawing

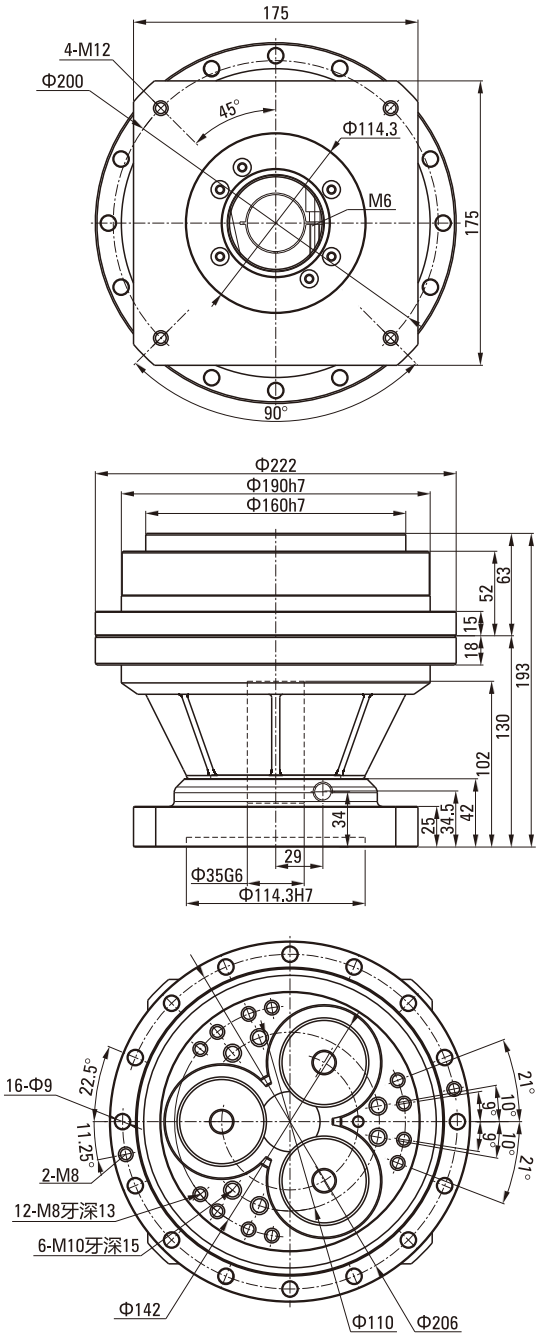

● **说明** Note:

1. 本图适用电机轴: <=35x80L；电机轴用锁紧带键一体轴。This figure applies to the motor shaft: <=35x80L; motor shaft lock use locker.
2. 减速机速比: (57,81,101,121,153):1 (轴输出)。Speed reduction ratio: (57,81,101,121,153): 1 (shaft output).
3. 润滑油脂: VIGO GREASE RE0 或 RE-00 (MOLYWHITE)。Lubricants: VIGO GREASE RE0 or RE-00 (MOLYWHITE).
4. 额定输出扭矩: 784N.m (输出转速: 15R/Min); 容许力矩1700Nm, 容许推力7400N。Rated output torque: 784N.m (output speed: 15R/Min); Allowable moment 1700Nm, allowable thrust 7400N.
5. 电机安装法兰依电机型号提供。Motor mounting flange according to motor model.

REA系列外形尺寸图
REA SERIES OUTLINE DIMENSION DRAWING

250BX-REA2 外形图 250BX-REA2 Outline Drawing

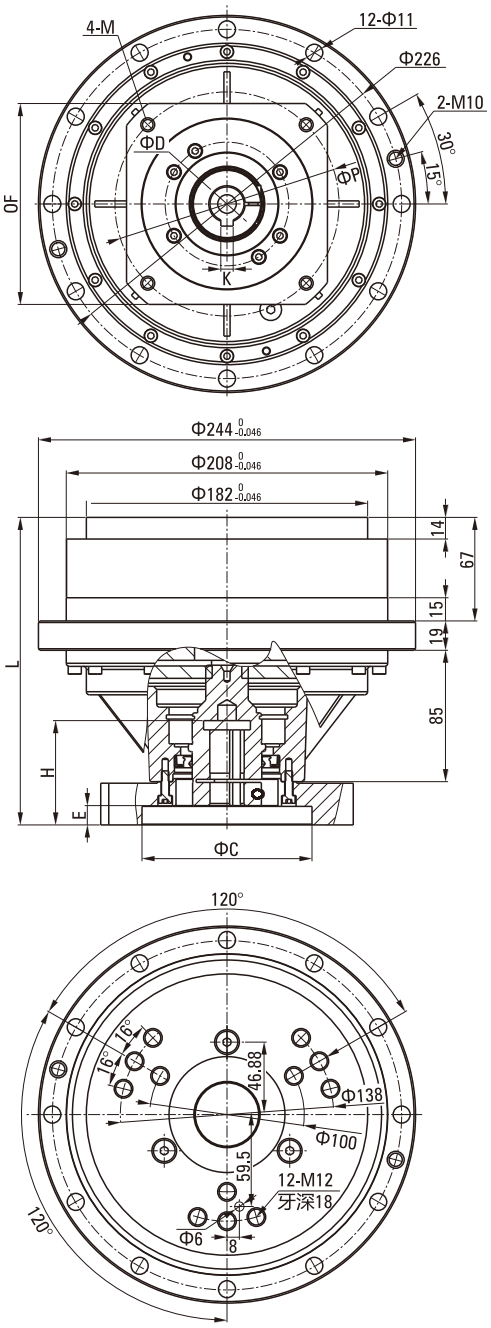

马达种类 Type Motor	M71	M73
C	110	95
D	22/24	22
E	12.5	9.5
F	130	100
H	66	57
K	6/8	6
L	199	196
M	M8	M6
P	145	115

马达种类 Type Motor	M74	M75
C	95	95
D	22	22/24
E	9.5	12.5
F	100	110
H	57	60
K	6/8	6/8
L	196	199
M	M8	M8
P	115	130

马达种类 Type Motor	M76	M91
C	130	114.3
D	22	28/35
E	12.5	27
F	142	175
H	60	82
K	6/8	8/10
L	199	213
M	M10	M12
P	165	200

说明 Note:

1. 本图适用电机轴: <=35x80L；电机轴用锁紧带键一体轴。This figure applies to the motor shaft: <=35x80L; motor shaft lock use locker.
2. 减速机速比: (81,111,161,175.28):1 (轴输出)。Speed reduction ratio: (81,111,161,175.28): 1 (shaft output).
3. 润滑油脂: VIGO GREASE RE0 或 RE-00 (MOLYWHITE)。Lubricants: VIGO GREASE RE0 or RE-00 (MOLYWHITE).
4. 额定输出扭矩: 1078N.m (输出转速: 15R/Min)。Rated output torque: 1078N.m (output speed: 15R/Min).
5. 电机安装法兰依电机型号提供。Motor mounting flange according to motor model.

REA系列外形尺寸图
REA SERIES OUTLINE DIMENSION DRAWING

280BX-REA 外形图 280BX-REA Outline Drawing

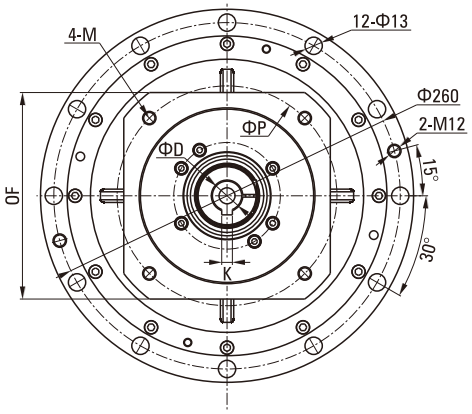

马达种类 Type Motor	M71	M73
C	110	95
D	22/24	22
E	13.4	10.4
F	130	100
H	70	65
K	6/8	6
L	192.4	189.4
M	M8	M6
P	145	115

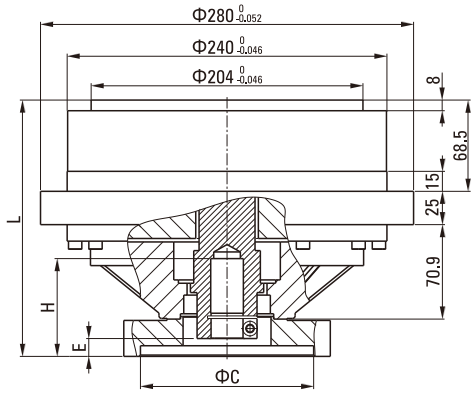

马达种类 Type Motor	M74	M75
C	95	95
D	22	22/24
E	10.4	13.4
F	100	110
H	57	60
K	6/8	6/8
L	189.4	192.4
M	M8	M8
P	115	130

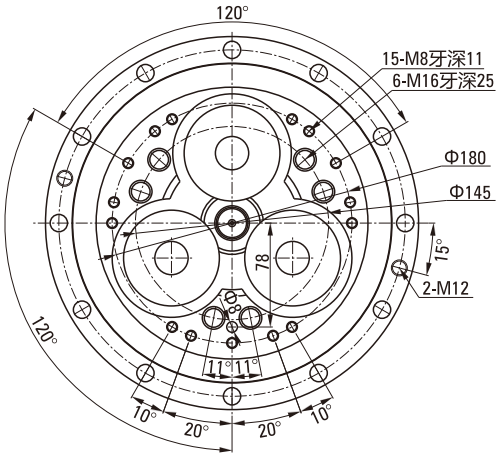

马达种类 Type Motor	M76	M91
C	130	114.3
D	22	28/35
E	13.4	27
F	142	175
H	60	82
K	6/8	8/10
L	192.4	206.4
M	M10	M12
P	165	200

说明 Note:

1. 本图适用电机轴:<=35x70L；电机轴用锁紧带键一体轴。This figure applies to the motor shaft: <=35x70L; Motor shaft is locked by locker.
2. 减速机速比: (81,101,129,145,171): 1 (轴输出)。Speed reduction ratio: (81,101,129,145,171): 1 (shaft output).
3. 润滑油脂: VIGO GREASE RE0或RE-00 (MOLYWHITE)。Lubricants: VIGO GREASE RE0 or RE-00 (MOLYWHITE).
4. 额定输出扭矩: 1568N.m (输出转速: 15R/Min)。Rated output torque: 1568N.m (output speed: 15R/Min).
5. 电机安装法兰依电机型号提供。The motor mounting flange is supplied according to the motor type.

REA系列外形尺寸图
REA SERIES OUTLINE DIMENSION DRAWING

320BX-REA 外形图 320BX-REA Outline Drawing

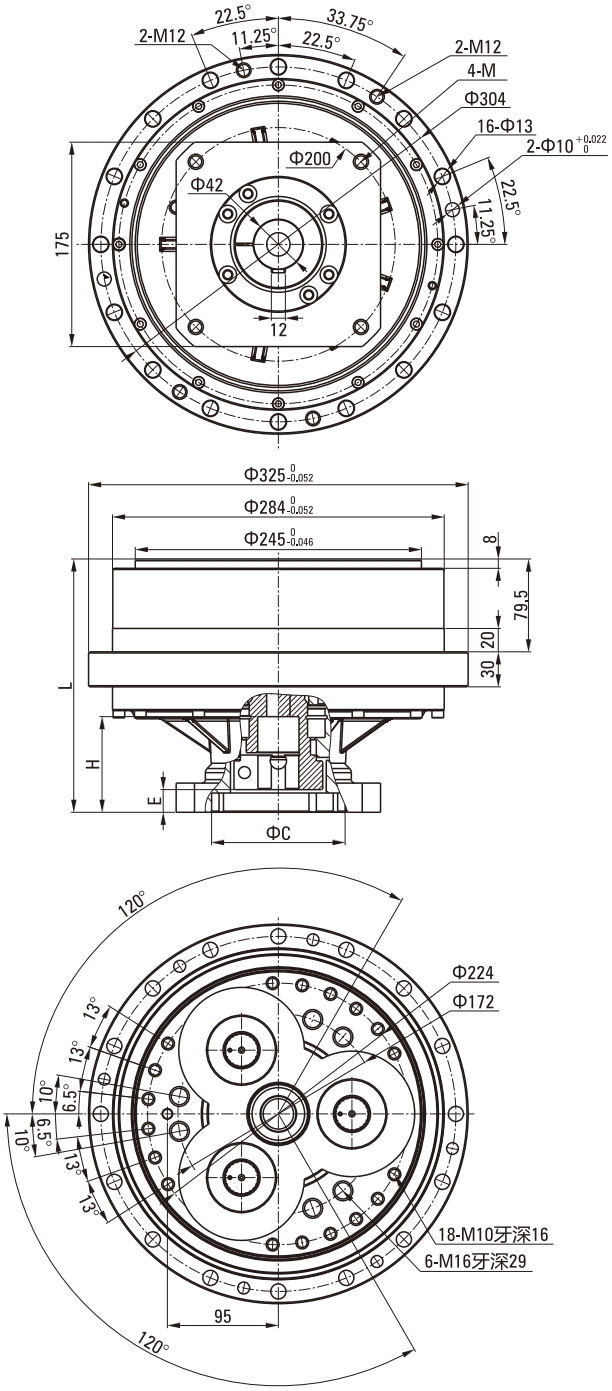

马达种类 Type Motor	M91	M92
C	114.3	180
D	35	35
E	19	19
F	175	200
H	81	81
K	10	10
L	216.9	216.9
M	M12	M12
P	200	215

马达种类 Type Motor	M91
C	114.3
D	42
E	48.5
F	175
H	116
K	12
L	248.4
M	M12
P	200

说明 Note:

1. 本图适用电机轴: <=42x114L；电机轴用锁紧带键一体轴。This figure applies to the motor shaft: <=42x114L; motor shaft lock use locker.
2. 减速机速比: (81,101,118.5,129,141,171,185):1 (轴输出)。Speed reduction ratio: (81,101,118.5,129,141,171,185): 1 (shaft output).
3. 润滑油脂: VIGO GREASE RE0 或 RE-00 (MOLYWHITE)。Lubricants: VIGO GREASE RE0 or RE-00 (MOLYWHITE).
4. 额定输出扭矩: 3136N.m (输出转速: 15R/Min)。Rated output torque: 3136N.m (output speed: 15R/Min).
5. 电机安装法兰依电机型号提供。Motor mounting flange according to motor model.

REA系列减速机安装图
RVA SERIES INSTALLATION DRAWING

REA系列减速机 REA Series Reducer

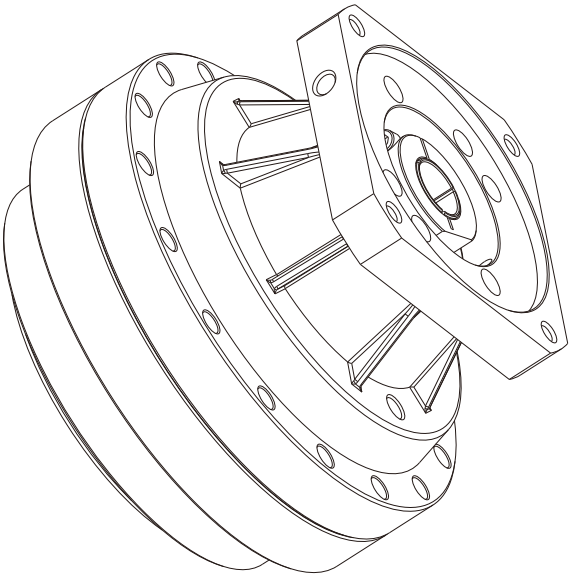

REA系列减速机安装示例 REA Series Reducer Installation Example

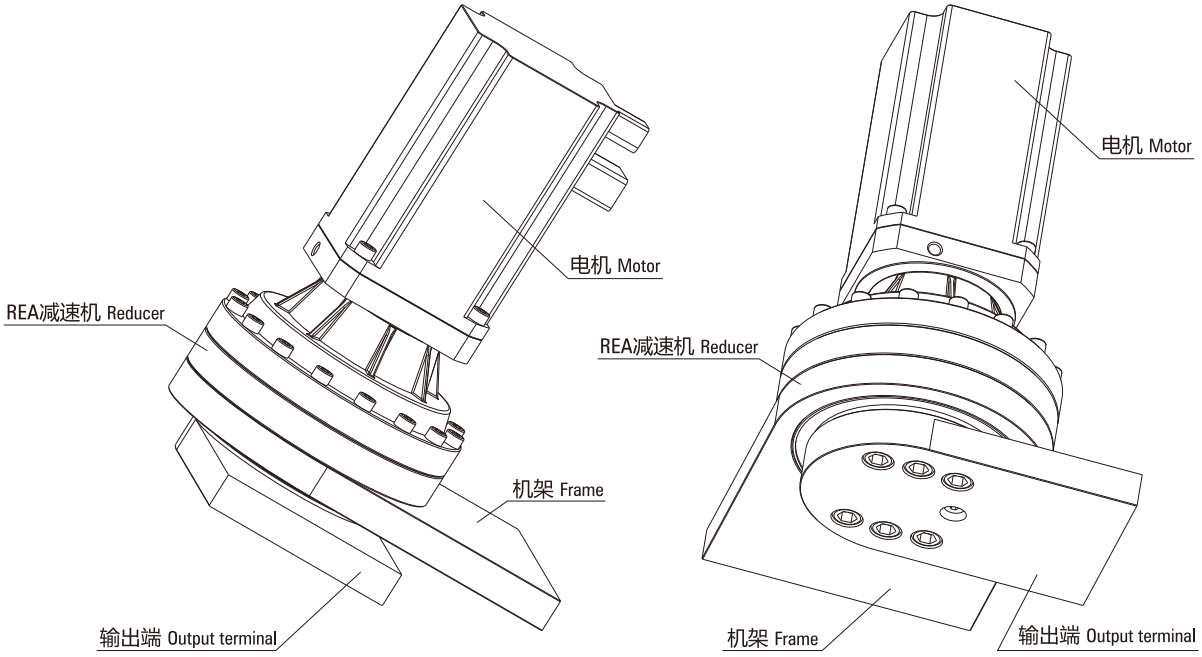

REA系列减速机安装图
REA SERIES INSTALLATION DRAWING

REA系列减速机安装拆解示意图 REA Series Mounting Schematic Diagram (Disassemble Diagram)

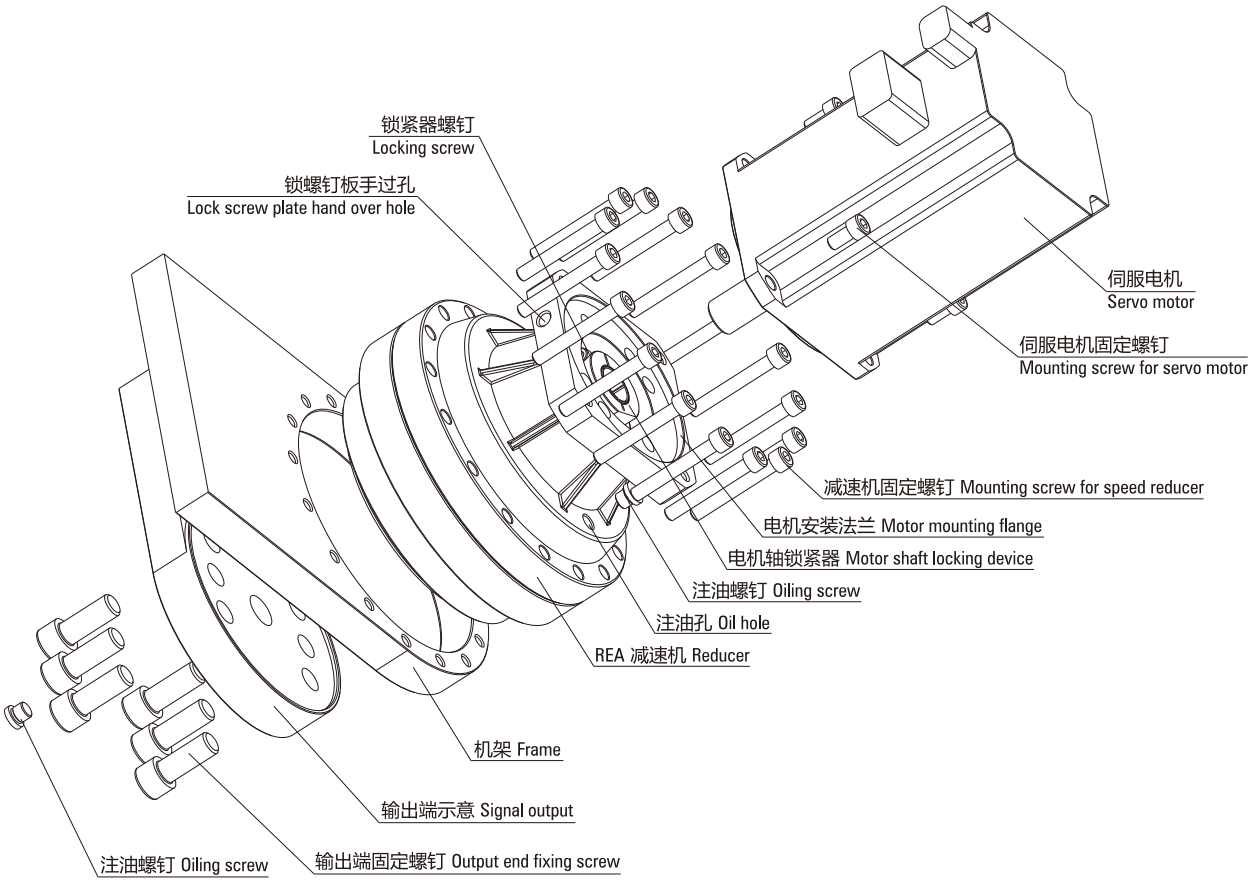

RCA系列外形尺寸图
RCA SERIES OUTLINE DIMENSION DRAWING

说明： Table C.9: Lubricating oil injection

- 减速比是指裸机的减速比。可以选配中心齿轮及定制输入齿轮；
  The reduction ratio refers to the reduction ratio of the bare gearbox. Sun gear and input gear are optional;
- 润滑油脂：VIGO GREASE RE0或RE-00 (MOLYWHITE)；
  Lubricating grease: VIGO GREASE RE0 or RE-00 (MOLYWHITE);
- 额定输出扭矩见表4，额定输出转速：15 r/min；
  See Table 4 for rated output torque, rated output speed: 15 r/min;
- 安装法兰需特别设计、制作，保证安装中心距及相关尺寸公差要求；
  The mounting flange needs to be specially designed and manufactured to ensure the installation center distance and related dimensional tolerance requirements;
- 安装时须做好密封，注意保证同心度等要求；
  It must be sealed when installing, pay attention to ensure the requirements such as concentricity;
- RCA机种上为带输入端法兰的机种，具体减速比见下表：
  RCA models are models with input flanges. The specific reduction ratio is shown in the table below:

机型 Model	裸机减速比 Bare Gearbox Reduction Ratio	RCA机型减速比 RCA Model Reduction Ratio	适配电机轴径 Adapted Motor Shaft Diameter
10CBX	27	81, 108, 153, 189, 243	11, 14
27CBX	36.57	79, 103, 120, 157, 177, 231.5	14, 19, 22
50CBX	32.54	80, 107, 151, 177, 234	19, 22, 24
100CBX/120CBX	36.75	76.3, 100.2, 124.7, 152, 214.3, 264.6	22, 24, 35
200CBX	35.61	106, 122, 156, 206, 245, 281	22, 24, 35, 42

- RCA机型可以衍生多个不同机种，适用不同场所，常用的有以下几种（图示）：
  RCA models can be derived from many different models, suitable for different places, the following are commonly used (as picture shows):

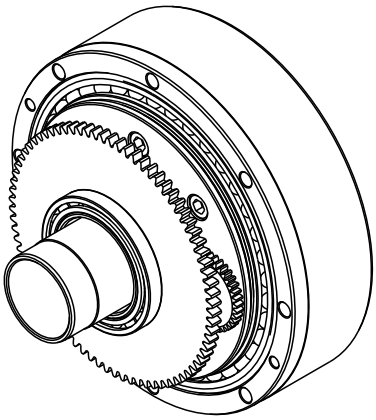

RVC-STD

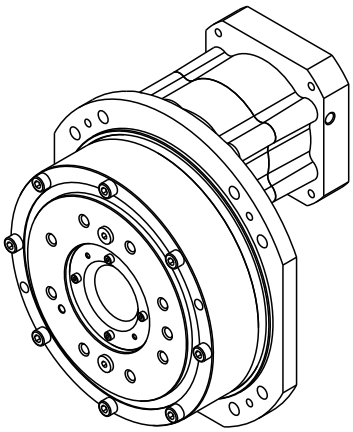

RCA

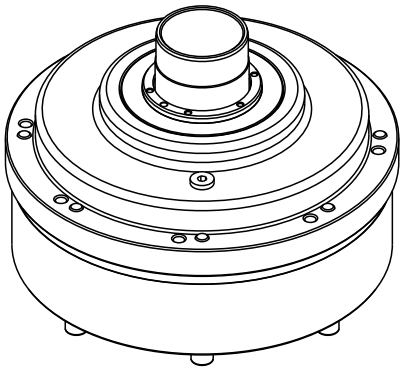

RCA-TB

RCA系列外形尺寸图
RCA SERIES OUTLINE DIMENSION DRAWING

10CBX-RCA 外形图 10CBX-RCA Outline Drawing

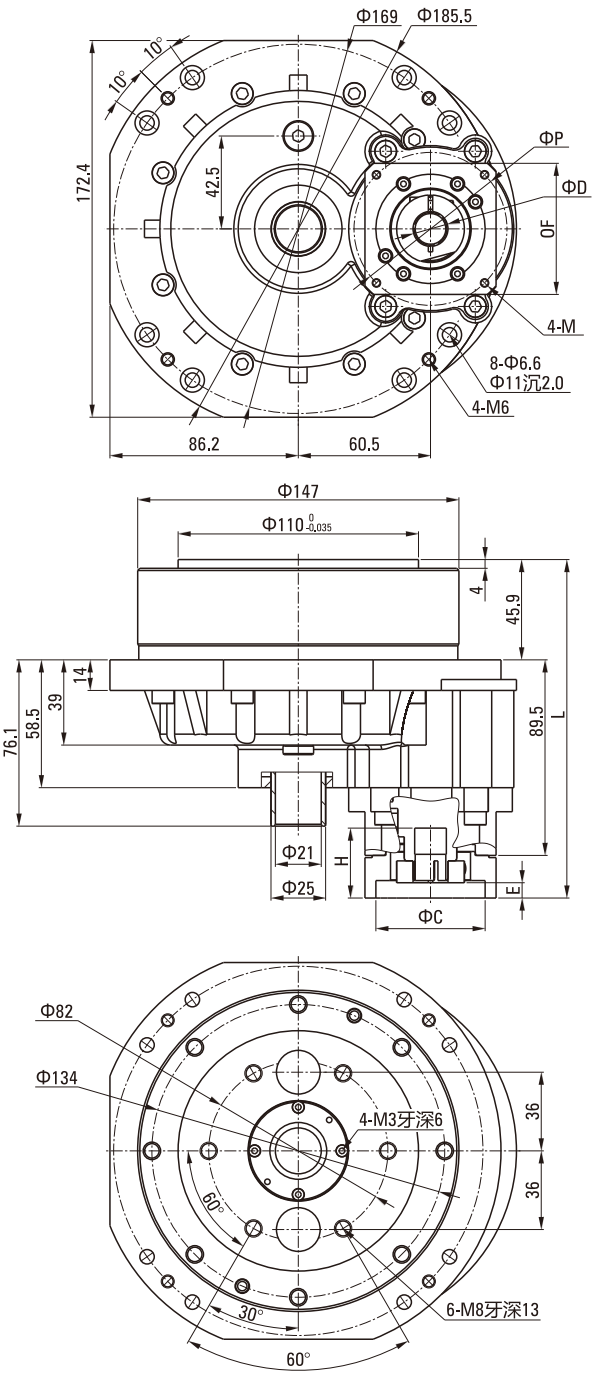

马达种类 Type Motor	M41	M42
C	50	50
D	14	14
E	7	7
F	60	60
H	32	32
L	154.9	154.9
M	M4	M5
P	70	70

马达种类 Type Motor	M51	M52
C	70	70
D	19	19
E	7	7
F	80	80
H	42	42
L	154.9	154.9
M	M5	M6
P	90	90

说明 Note:

1. 本图为中空10CBX型减速器。This picture shows the hollow 10CBX reducer.
2. 减速机速比: (81,108,453,189,243):1。Reducer speed ratio: (81,108,453,189,243):1.
3. 润滑油脂: VIGO GREASE RE0或RE-00 (MOLYWHITE)。Grease: VIGO GREASE RE0 or RE-00 (MOLYWHITE).
4. 额定输出扭矩: 98N.m (输出转速: 15R/Min)。 Rated output torque: 98N.m (output speed: 15R / Min).

RCA系列外形尺寸图
RCA SERIES OUTLINE DIMENSION DRAWING

10CBX-27-RCA-TB 外形图 10CBX-27-RCA-TB Outline Drawing

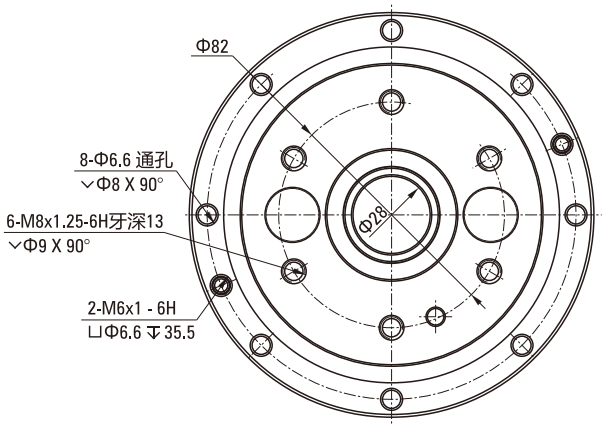

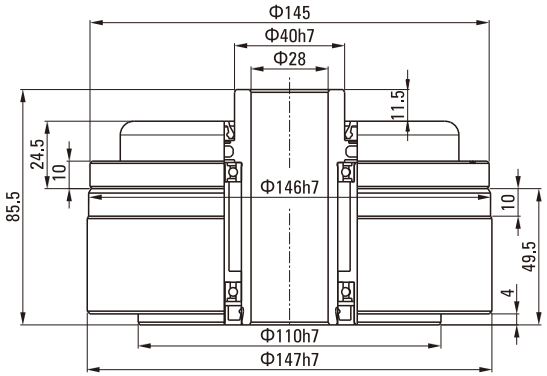

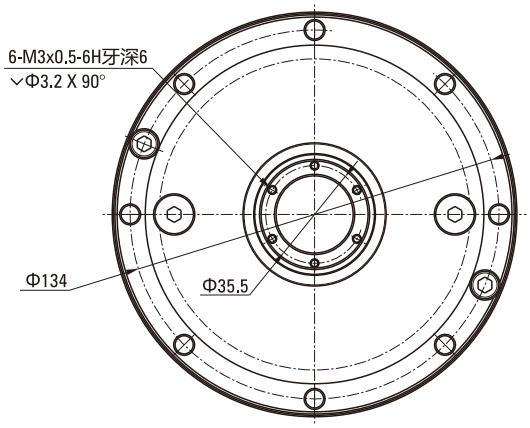

● **说明** Note:

1. 本图为中空10CBX型减速器，输入端配同步带轮。This picture shows the hollow 10CBX reducer, the input end with timing pulley.
2. 减速机速比: 27:1。Reducer speed ratio: 27:1.
3. 润滑油脂: VIGO GREASE RE0或RE-00 (MOLYWHITE)。Grease: VIGO GREASE RE0 or RE-00 (MOLYWHITE).
4. 额定输出扭矩: 98N.m (输出转速: 15R/Min)。 Rated output torque: 98N.m (output speed: 15R / Min).
5. 安装法兰需特别设计、制作，保证中心距及相关尺寸公差要求。
   The installation flanges shall be specially designed and manufactured to ensure the center distance and the relevant requirements of the PRCs.

RCA系列外形尺寸图
RCA SERIES OUTLINE DIMENSION DRAWING

27CBX-RCA 外形图 27CBX-RCA Outline Drawing

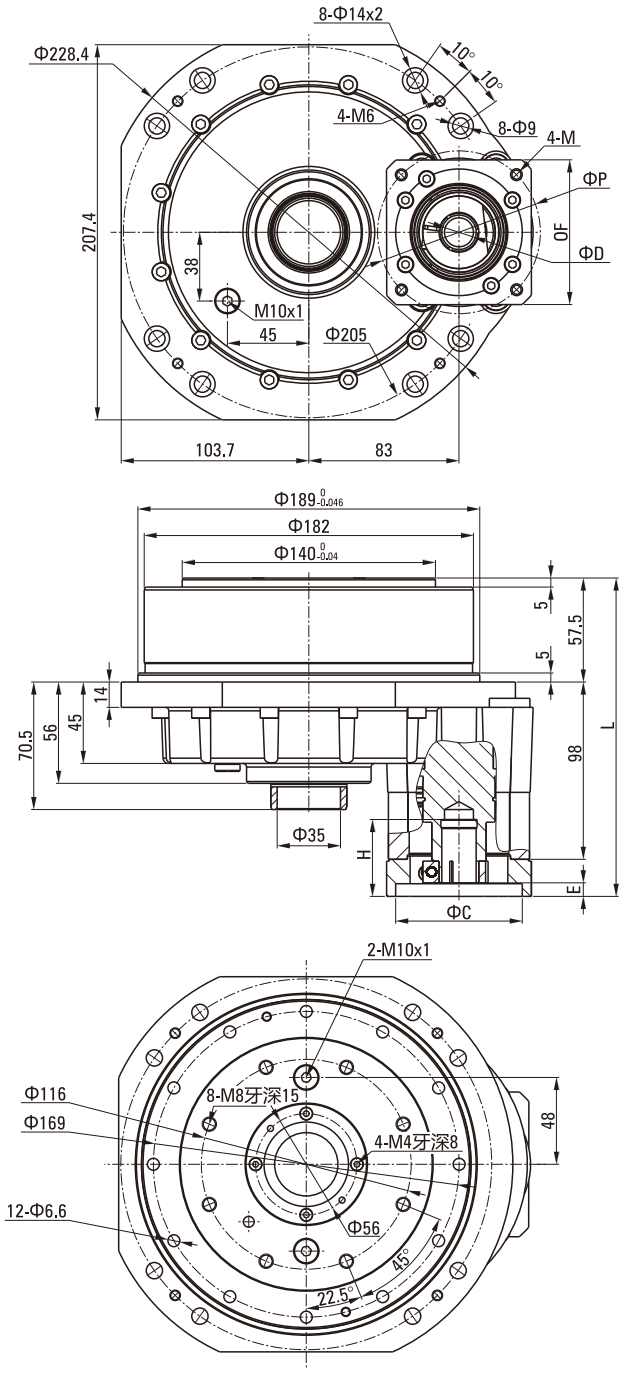

马达种类 Type Motor	M51	M52
C	70	70
D	19	19
E	7.5	7.5
F	80	80
H	42	42
K	6	6
L	176	176
M	M5	M6
P	90	90

马达种类 Type Motor	M53	M54
C	80	110
D	19	19
E	7.5	23
F	90	130
H	42	58
K	6	6
L	176	191.5
M	M6	M8
P	100	145

马达种类 Type Motor	M54	M56
C	110	95
D	22	19
E	23	20
F	130	100
H	58	55
K	8	6
L	191.5	188.5
M	M8	M6
P	145	115

马达种类 Type Motor	M57
C	95
D	22
E	20
F	100
H	55
K	8
L	188.5
M	M8
P	115

说明 Note:

1. 本图为中空27CBX型减速器。This picture shows the hollow 27CBX reducer.
2. 减速机速比: (79,103,120,157,177,231.5):1。Reducer speed ratio: (79,103,120,157,177,231.5):1.
3. 润滑油脂: VIGO GREASE RE0或RE-00 (MOLYWHITE)。Grease: VIGO GREASE RE0 or RE-00 (MOLYWHITE).
4. 额定输出扭矩: 264N.m (输出转速: 15R/Min)。 Rated output torque: 264N.m (output speed: 15R / Min).

RCA系列外形尺寸图
RCA SERIES OUTLINE DIMENSION DRAWING

27CBX-36.57-RCA-TB 外形图 27CBX-36.57-RCA-TB Outline Drawing

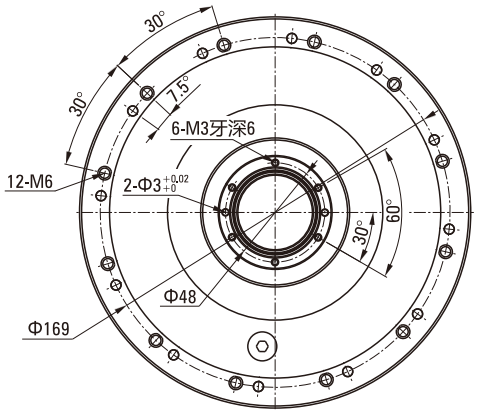

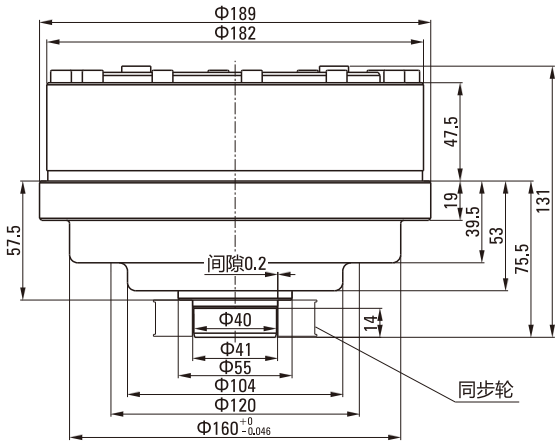

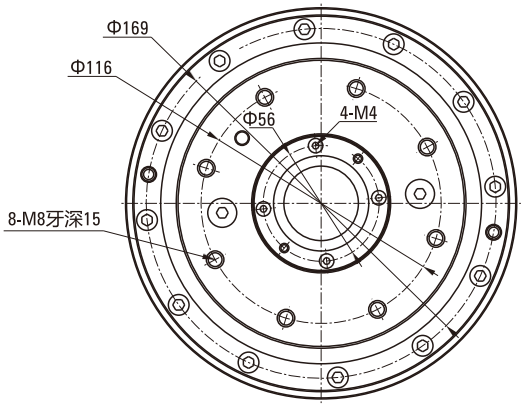

● **说明** Note:

1. 本图为中空27CBX型减速器，输入端配同步带轮。This picture shows the hollow 27CBX reducer, the input end with timing pulley.
2. 减速机速比: 36.57:1。 Reducer speed ratio: 36.57:1.
3. 润滑油脂: VIGO GREASE RE0或RE-00 (MOLYWHITE)。 Grease: VIGO GREASE RE0 or RE-00 (MOLYWHITE).
4. 额定输出扭矩: 264N.m (输出转速: 15R/Min)。 Rated output torque: 264N.m (output speed: 15R / Min).
5. 安装法兰需特别设计、制作，保证中心距及相关尺寸公差要求。
   The installation flanges shall be specially designed and manufactured to ensure the center distance and the relevant requirements of the PRCs.

RCA系列外形尺寸图
RCA SERIES OUTLINE DIMENSION DRAWING

50CBX-RCA 外形图 50CBX-RCA Outline Drawing

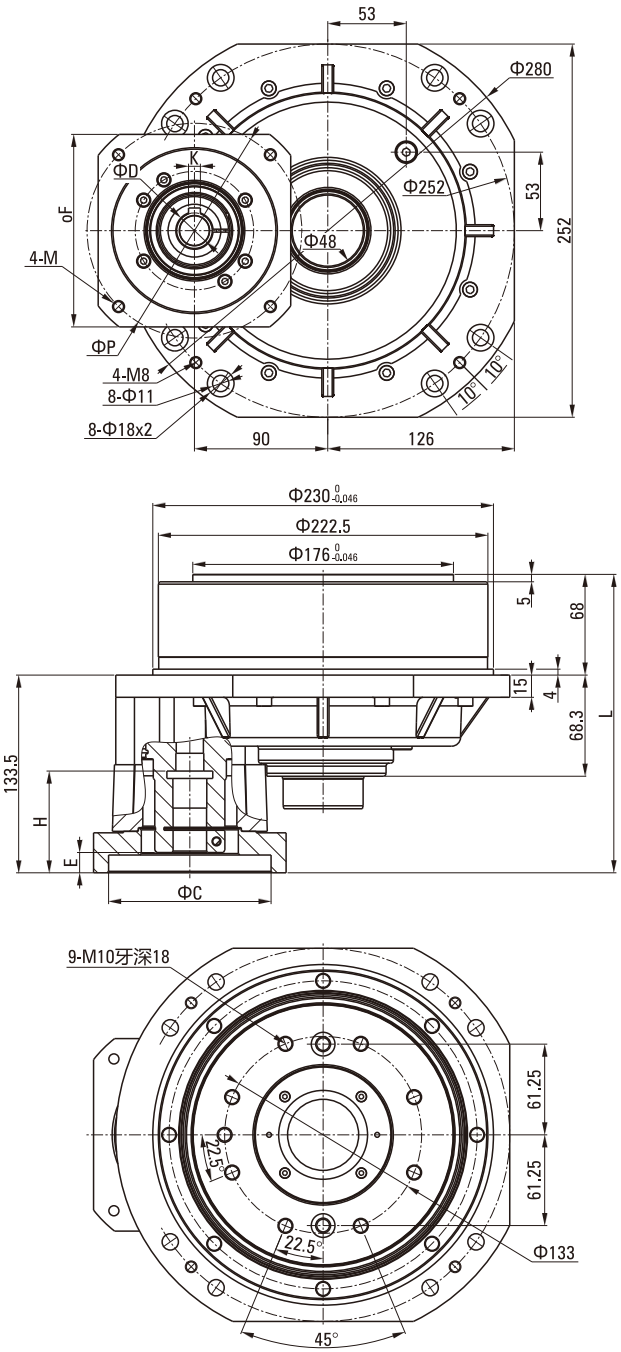

马达种类 Type Motor	M51	M52
C	70	70
D	19	19
E	6	6
F	80	80
H	58	58
K	6	6
L	194	194
M	M5	M6
P	90	90

马达种类 Type Motor	M53	M71
C	80	110
D	19	19/22/24
E	6	13.5
F	90	130
H	58	65
K	6	6/8
L	194	201.5
M	M6	M8
P	100	145

马达种类 Type Motor	M73	M74
C	95	95
D	19/22/24	19/22/24
E	10.5	10.5
F	100	100
H	62	62
K	6/8	6/8
L	198.5	198.5
M	M6	M8
P	115	115

马达种类 Type Motor	M75
C	95
D	19/22/24
E	13.5
F	110
H	65
K	6/8
L	201.5
M	M8
P	130

说明 Note:

1. 本图为中空50CBX型减速器。This picture shows the hollow 50CBX reducer.
2. 减速机速比: (80,107,151,177,234):1。Reducer speed ratio: (80,107,151,177,234):1.
3. 润滑油脂: VIGO GREASE RE0或RE-00 (MOLYWHITE)。Grease: VIGO GREASE RE0 or RE-00 (MOLYWHITE).
4. 额定输出扭矩: 490N.m (输出转速: 15R/Min)。 Rated output torque: 490N.m (output speed: 15R / Min).

RCA系列外形尺寸图
RCA SERIES OUTLINE DIMENSION DRAWING

50CBX-32.54-RCA-TB 外形图 50CBX-32.54-RCA-TB Outline Drawing

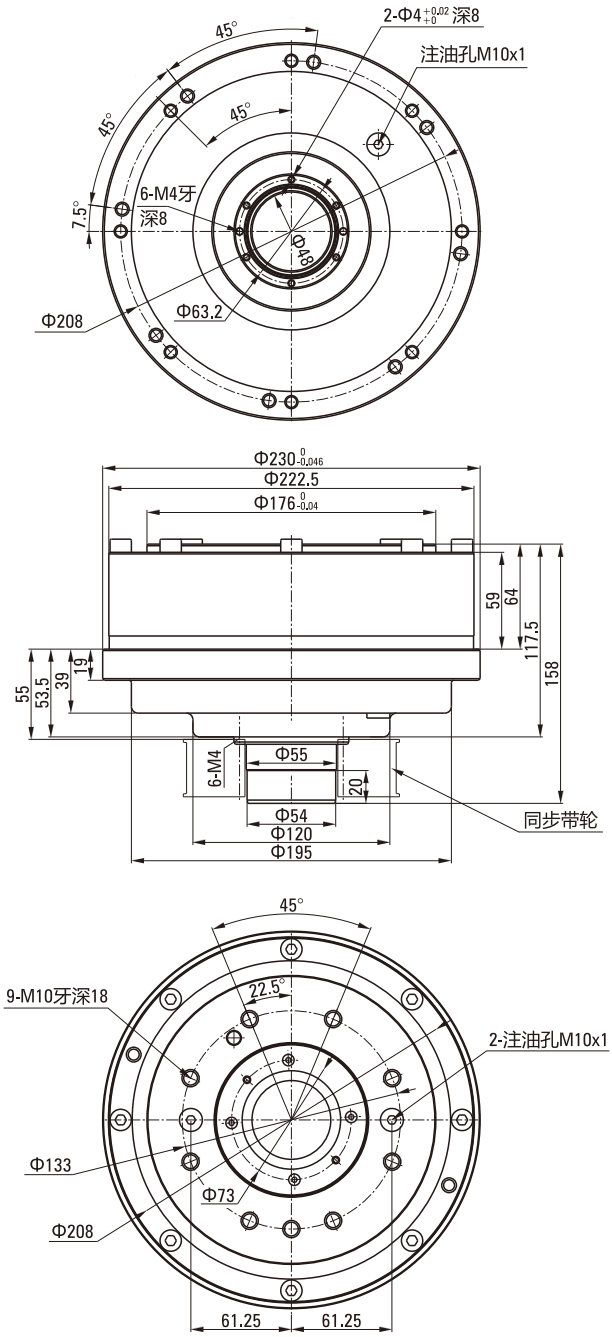

● **说明** Note:

1. 本图适用配同步带轮。The figure applies with timing pulley.
2. 减速机速比: 32.54:1。Reducer speed ratio: 32.54:1.
3. 润滑油脂: VIGO GREASE RE0或RE-00 (MOLYWHITE)。Grease: VIGO GREASE RE0 or RE-00 (MOLYWHITE).
4. 额定输出扭矩: 498N.m (输出转速: 15R/Min)。 Rated output torque: 498N.m (output speed: 15R / Min).
5. 系统减速比: 32.54乘以同步带级的速比。System reduction ratio: 32.54 multiplied by the speed ratio belt.

RCA系列外形尺寸图
RCA SERIES OUTLINE DIMENSION DRAWING

100CBX-RCA 外形图 100CBX-RCA Outline Drawing

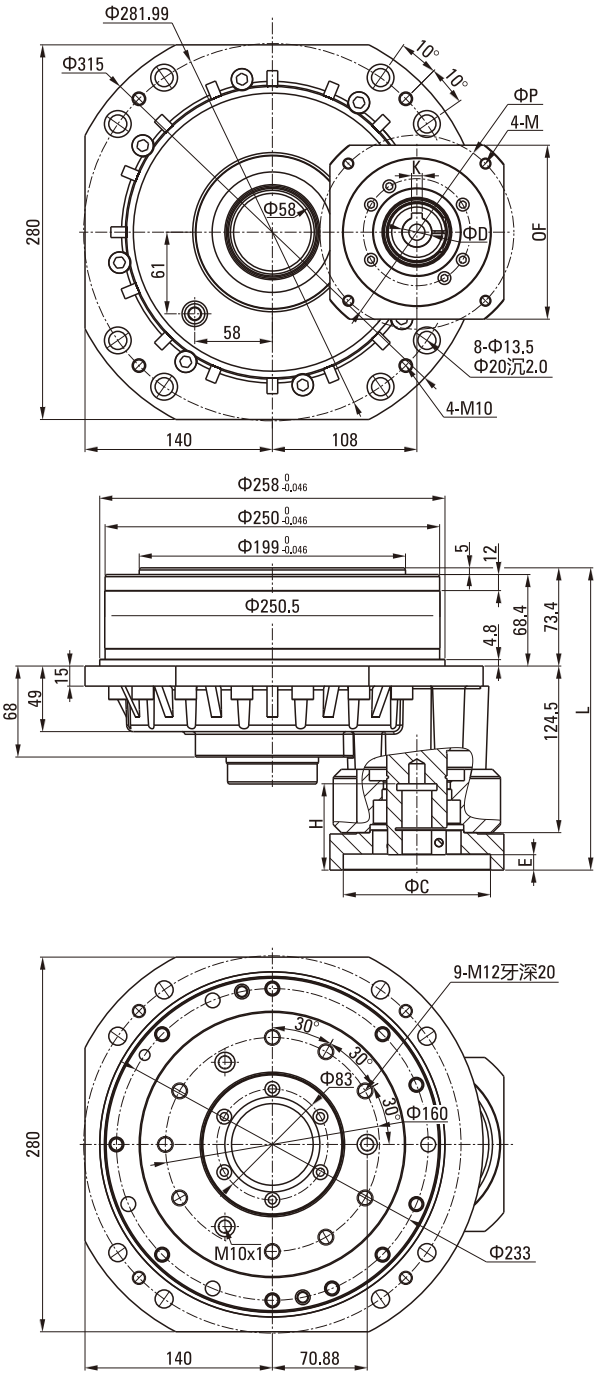

马达种类 Type Motor	M71	M73
C	110	95
D	22/24	22/24
E	11.5	8.5
F	130	100
H	62	58
K	6/8	6
L	226	223
M	M8	M6
P	145	115

马达种类 Type Motor	M74	M75
C	95	95
D	22/24	22/24
E	8.5	11.5
F	100	110
H	58	60
K	6/8	6/8
L	223	226
M	M8	M8
P	115	130

马达种类 Type Motor	M76	M91
C	130	114.3
D	22/24	28/35
E	11.5	25.5
F	142	175
H	60	82
K	6/8	8/10
L	226	240
M	M10	M12
P	165	200

说明 Note:

1. 本图为中空100CBX型减速器。This picture shows the hollow 100CBX reducer.
2. 减速机速比: (76.3,100.2,124.7,152,214.3,264.6):1。 Reducer speed ratio: (76.3,100.2,124.7,152,214.3,264.6):1.
3. 润滑油脂: VIGO GREASE RE0或RE-00 (MOLYWHITE)。 Grease: VIGO GREASE RE0 or RE-00 (MOLYWHITE).
4. 额定输出扭矩: 980N.m (输出转速: 15R/Min)。 Rated output torque: 980N.m (output speed: 15R / Min).

RCA系列外形尺寸图
RCA SERIES OUTLINE DIMENSION DRAWING

100CBX-36.75-RCA-TB 外形图 100CBX-36.75-RCA-TB Outline Drawing

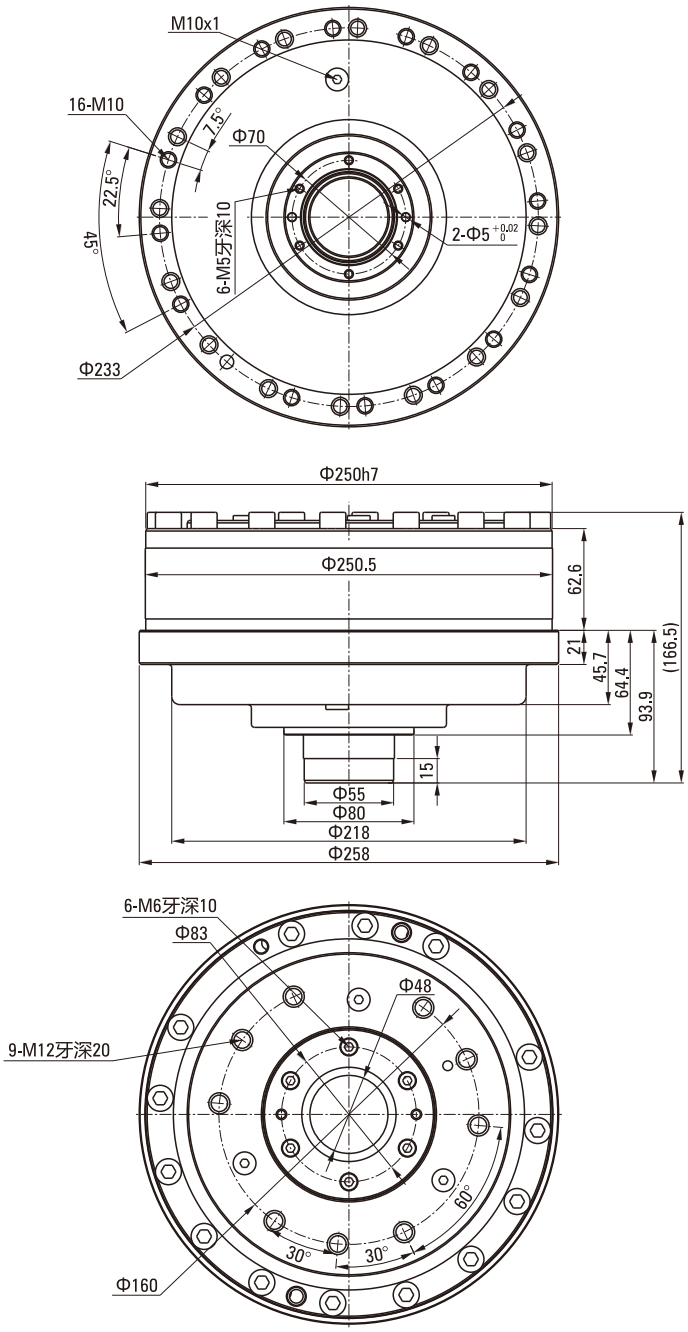

● **说明** Note:

1. 本图适用配同步带轮。The figure applies with timing pulley.
2. 减速机速比: 36.75:1。Reducer speed ratio: 36.75:1.
3. 润滑油脂: VIGO GREASE RE0或RE-00 (MOLYWHITE)。Grease: VIGO GREASE RE0 or RE-00 (MOLYWHITE).
4. 额定输出扭矩: 980N.m (输出转速: 15R/Min)。 Rated output torque: 980N.m (output speed: 15R / Min).
5. 系统减速比: 36.75乘以同步带级的速比。System reduction ratio: 36.75 multiplied by the speed ratio belt.

RCA系列外形尺寸图
RCA SERIES OUTLINE DIMENSION DRAWING

200CBX–RCA 外形图 200CBX-RCA Outline Drawing

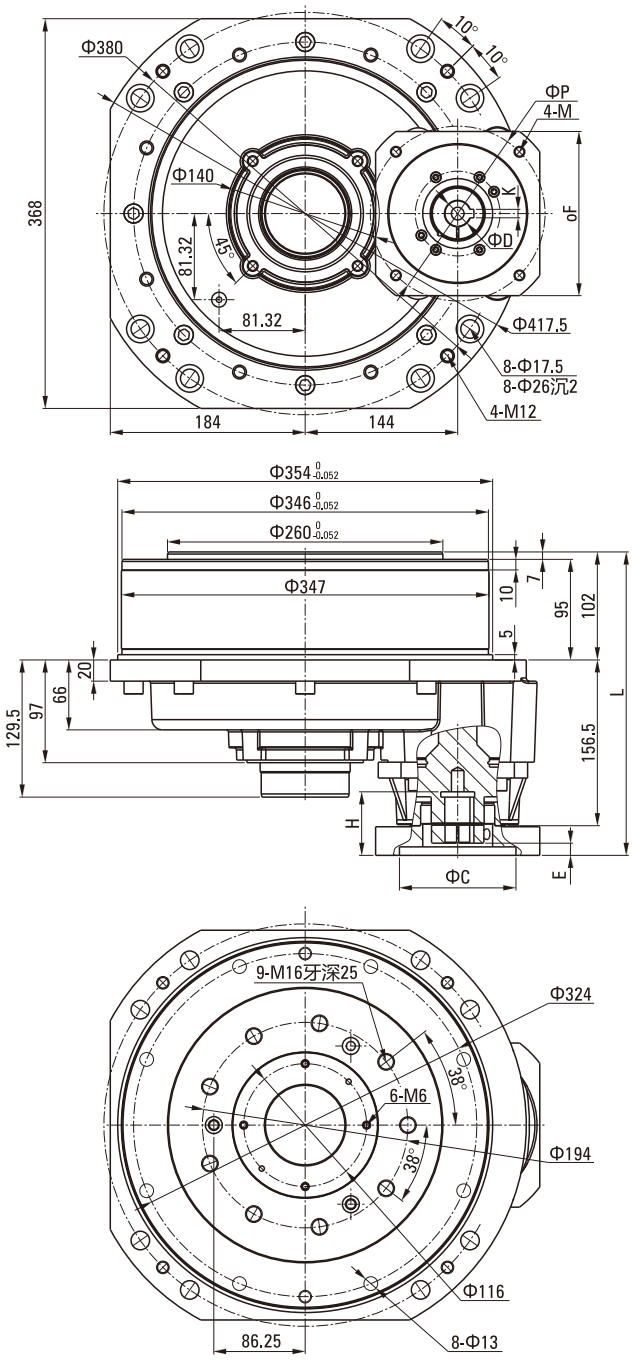

马达种类 Type Motor	M71	M71
C	110	110
D	22/24	28
E	11.5	11.5
F	130	130
H	60	60
K	6/8	8
L	286.5	286.5
M	M8	M8
P	145	145

马达种类 Type Motor	M91	M91
C	114.3	114.3
D	28	35
E	25.5	25.5
F	175	175
H	74	84
K	8	10
L	300.5	300.5
M	M12	M12
P	200	200

说明 Note:

1. 本图为中空200CBX型减速器。This picture shows the hollow 200CBX reducer.
2. 减速机速比: (106,122,156,206,245,281):1。Reducer speed ratio: (106,122,156,206,245,281):1.
3. 润滑油脂: VIGO GREASE RE0或RE-00 (MOLYWHITE)。Grease: VIGO GREASE RE0 or RE-00 (MOLYWHITE).
4. 额定输出扭矩: 1960N.m (输出转速: 15R/Min)。 Rated output torque: 1960N.m (output speed: 15R / Min).

RCA系列外形尺寸图
RCA SERIES OUTLINE DIMENSION DRAWING

200CBX-34.86-RCA-TB 外形图 200CBX-34.86-RCA-TB Outline Drawing

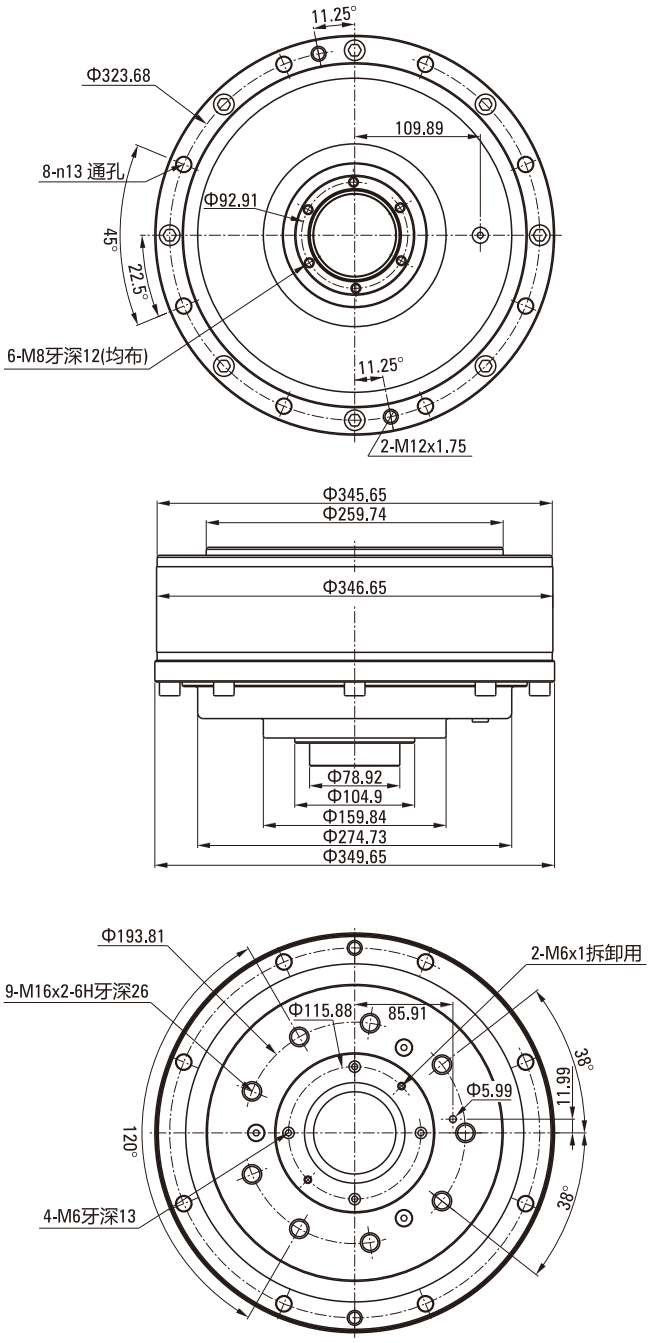

● **说明** Note:

1. 减速器单体减速比: i=34.86 (1499/43)，减速器单体重: 约55.6kg。Reducer single reduction ratio: i = 34.86 (1499/43), weight of single reducer: about 55.6kg.
2. 图示中心齿轮为标准型，可依客户使用要求提供适用的中心齿轮。
   The sun gear shown in the figure is a standard type, which can be provided according to customer requirements.
3. 减速器额定输出转矩为1960Nm (输出转速15RPM, 输入电机功率4KW)。Rated output torque: 1960N.m (output speed: 15RPM, input motor power 4KW)).

RCA系列外形尺寸图
RCA SERIES OUTLINE DIMENSION DRAWING

320CBX-RCA 外形图 320CBX-RCA Outline Drawing

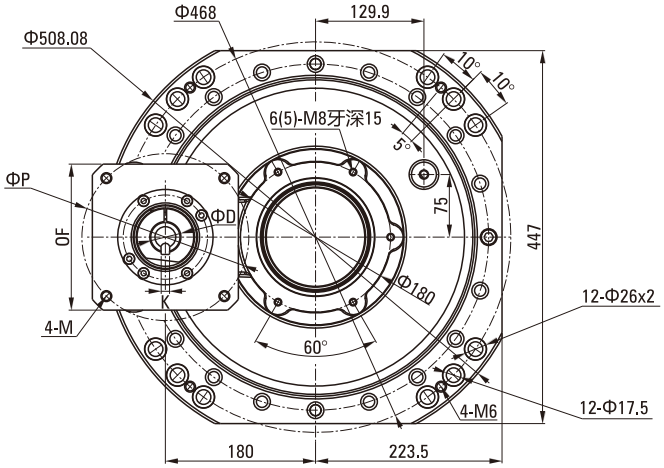

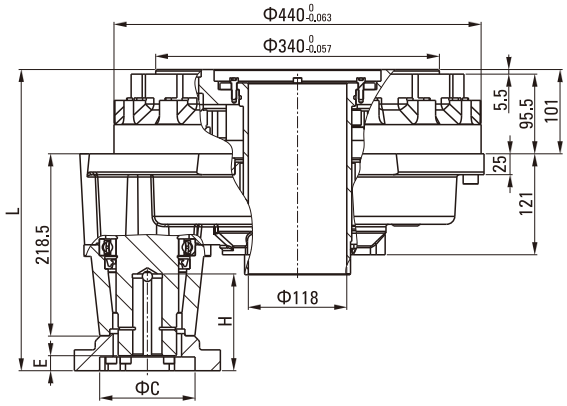

马达种类 Type Motor	M91	M91
C	114.3	114.3
D	42	35
E	18	18
F	175	175
H	116	90
K	12	10
L	361.5	361.5
M	M12	M12
P	200	200

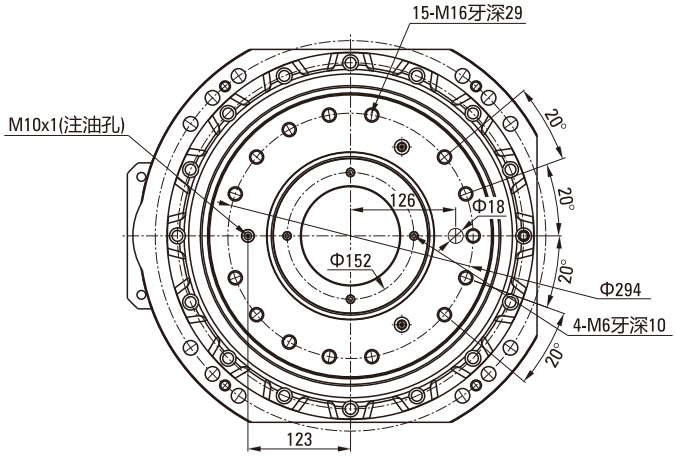

说明 Note:

1. 本图为中空320CBX型减速器。This picture shows the hollow 320CBX reducer, the input end with timing pulley.
2. 减速机速比: (253 etc...):1。Reducer speed ratio: (253 etc...):1.
3. 润滑油脂: VIGO GREASE RE0或RE-00 (MOLYWHITE)。Grease: VIGO GREASE RE0 or RE-00 (MOLYWHITE).
4. 额定输出扭矩: 3160N.m (输出转速: 15R/Min)。 Rated output torque: 3160N.m (output speed: 15R / Min).

选定产品–流程图
SELECTED PRODUCT - FLOW CHART

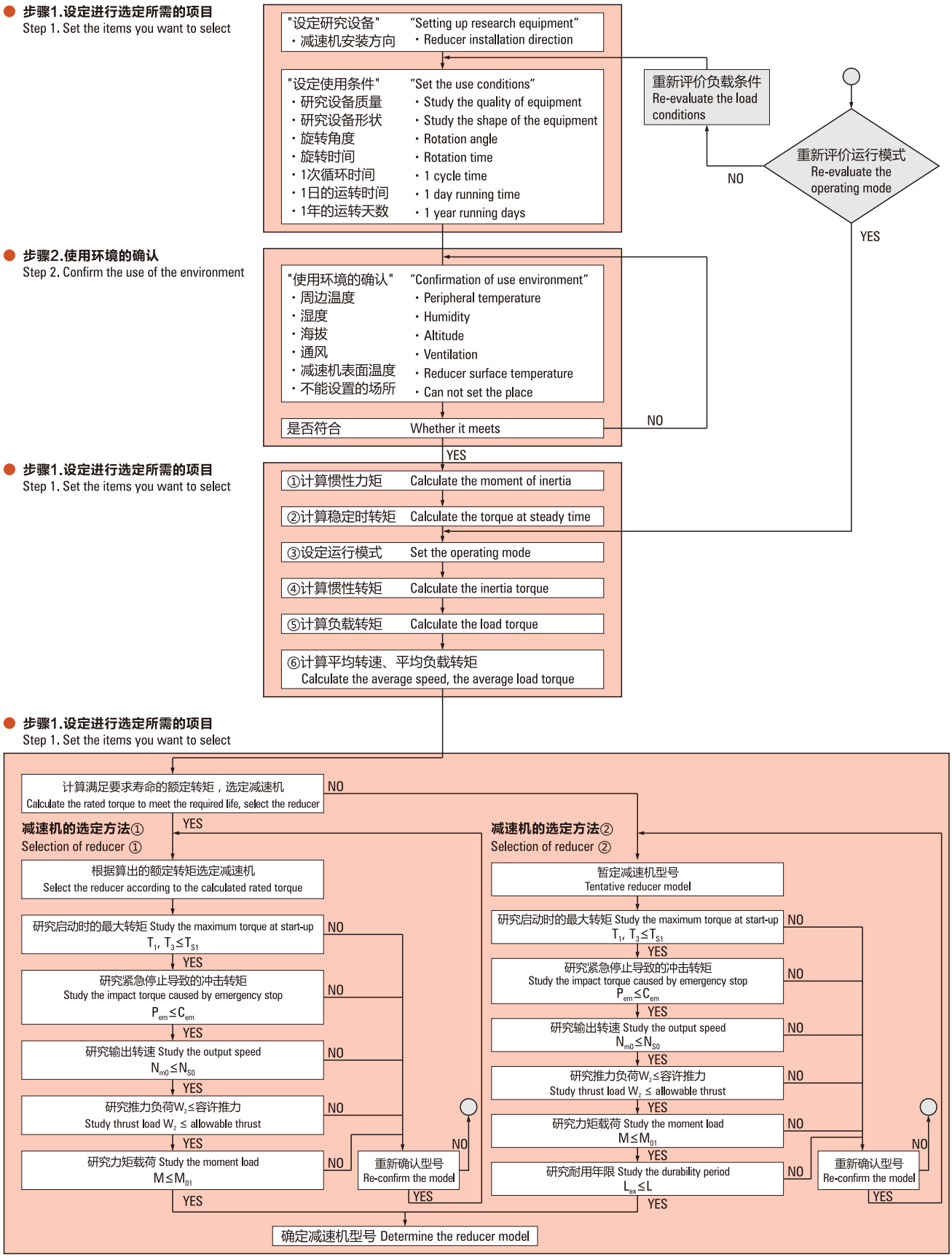

根据选定的减速机的瞬时最大容许转矩，限制电动机的转矩值。

The torque value of the motor is limited according to the instantaneous maximum allowable torque of the selected reducer.

选定产品–型号代码的选定例
SELECTED PRODUCT - SELECTION OF MODEL CODE

以水平方向旋转移动的方式使用时 When Used In A Horizontal Direction To Rotate And Move

● **步骤1.设定进行选定所需的项目** Step 1. Set the items you want to select

设定项目 Set The Project	设定值 Set The Value
减速机安装方向 Reducer installation direction	安装垂直轴 Install the vertical axis
所探讨设备的质量 Explore the quality of the equipment	
W_A ---------- 圆盘重量 Disc weight (kg)	180
W_B ---------- 工作重量 Working weight (kg)	20X4 个 pcs
所探讨设备的形状 Explores the shape of the equipment	
D_1 ---------- 圆盘 Disc: D尺寸 D size (mm)	1200
a ---------- 工件 Workpiece: a尺寸 a size (mm)	100
b ---------- 工件 Workpiece: b尺寸 b size (mm)	300
D_2 ---------- 工件 Workpiece: P.C.D. (mm)	1000
运行条件 Operating conditions	
θ ---------- 旋转角度 Rotation angle (°)※1	180
【$t_1+t_2+t_3$】---------- 旋转时间 Rotation time (s)	2.5
【t_4】---------- 1次循环时间 1 cycle time (s)	20
Q_1 ---------- 1日的设备运转时间 (h/日) 1 day of operation time (h/day)	12
Q_2 ---------- 1年的设备运转天数 (日/年) 1 year equipment operating days (day/year)	365

※1. 当旋转角度为小范围 (10°以下) 时，由于润滑不良及内部部件负荷集中，有可能导致减速机的额定寿命缩短。
When the rotation angle is small (10° or less), it may cause the rated life of the gear unit to be shortened due to poor lubrication and internal component load.

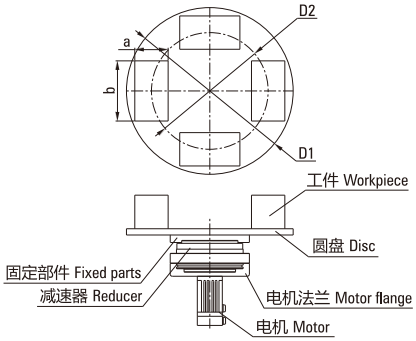

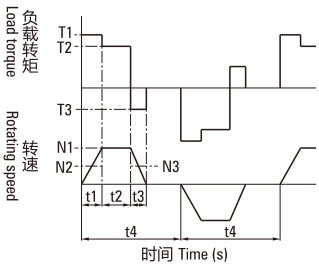

● **步骤2.使用环境的确认** Step 2. Confirm the use of the environment

确认项目 Confirm The Item	标准值 Standard Value
S_0 ---------- 环境温度 Ambient Temperature (℃)	-10~40
S_1 ---------- 减速机表面温度 Reducer surface temperature (℃)	60以下 Under

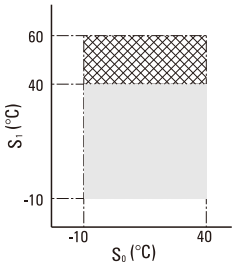

● **步骤3–1.研究减速机的负载** Step 3–1. Study the load of the reducer

设定项目 Set The Project		计算公式 Calculation Formula	选定例 Selected Example
① 计算惯性力矩。 Calculate the moment of inertia.			
I_R	载荷惯性力矩 Load moment of inertia (kgm^2)	$I_{R1}=\frac{W_a x(\frac{D_1}{2X1000})^2}{2}$ $I_{R2}=[\frac{W_B}{12}\{(\frac{a}{1000})^2+(\frac{b}{1000})^2\}+W_B x(\frac{D_2}{2X1000})^2]xn$ I_{R1}=圆盘的惯性力矩 The moment of inertia of the disc I_{R2}=工作的惯性 The inertia of work $I_R=I_{R1}+I_{R2}$ n=工件数量 Number of workpieces	$I_{r1}=\frac{180x(\frac{1200}{2X1000})^2}{2}$ $=32.4\ (kgm^2)$ $I_{R2}=[\frac{20}{12}\{(\frac{100}{1000})^2+(\frac{300}{1000})^2\}+20x(\frac{1000}{2X1000})^2]x4$ $=20.7\ (kgm^2)$ $I_R=32.4+20.7$ $=53.1\ (kgm^2)$
② 进行稳定时转矩的研究。 Research on torque at stable.			
T_R	稳定时转矩 Steady torque (Nm)	$T_R=(W_A+W_B)x9.8x\frac{D_{in}}{2x1000}x\mu$ μ=摩擦系数 注: 由于本例中精密减速机RV的轴承有负载，因此，适用于0.015。 D_{in}=转动直径: 在本选定计算中，以与转动直径几乎相同的定位圆直径进行计算。 ※未确定减速机型号时，定位圆直径应选定下列数值。 最大定位圆直径: 325(mm) 320BX-RVE	$T_R=(180+20x4)x9.8x\frac{325}{2x1000}x0.015=6.2(Nm)$ μ= Coefficient of friction Note: Since the bearings of the precision reducer RV in this example are loaded, they are suitable for use with 0.015. D_{in}=Rotation Diameter: In this selected calculation, the diameter of the locating circle is almost the same as the diameter of rotation. ※When the reducer model is not determined, the following values should be selected for the diameter of the positioning circle. Maximum positioning circle diameter: 325(mm) 320BX-RVE

● **步骤3–2.请参见（P.55）** Step 3–2. Please refer to (P.55)

选定产品–型号代码的选定例
SELECTED PRODUCT - SELECTION OF MODEL CODE

以垂直方向旋转移动的方式使用时 When Used In A Vertical Direction To Rotate And Move

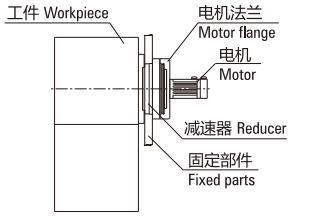

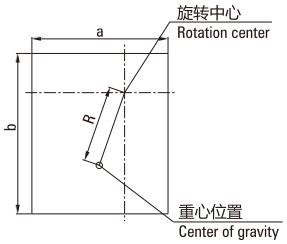

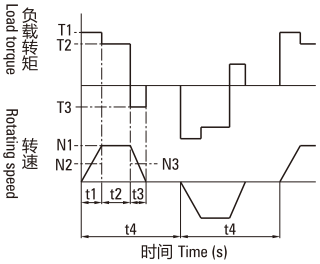

● **步骤1.设定进行选定所需的项目** Step 1. Set the items you want to select

设定项目 Set The Project	设定值 Set The Value
减速机安装方向 Reducer installation direction	安装垂直轴 Install the vertical axis
所探讨设备的质量 Explore the quality of the equipment	
W_c ---------- 搭载工作重量 Equipped with work weight (kg)	490
所探讨设备的形状 Explores the shape of the equipment	
a ---------- a尺寸 a size (mm)	500
b ---------- b尺寸 b size (mm)	500
R ---------- R尺寸 R size (mm)	320
运行条件 Operating conditions	
θ ---------- 旋转角度 Rotation angle (°)※1	90
【$t_1+t_2+t_3$】---------- 旋转时间 Rotation time (s)	1.5
【t_4】---------- 1次循环时间 1 cycle time (s)	20
Q_1 ---------- 1日的设备运转时间 (h/日) 1 day of operation time (h/day)	24
Q_2 ---------- 1年的设备运转天数 (日/年) 1 year equipment operating days (day/year)	365

※1. 当旋转角度为小范围 (10°以下) 时，由于润滑不良及内部部件负荷集中，有可能导致减速机的额定寿命缩短。
When the rotation angle is small (10° or less), it may cause the rated life of the gear unit to be shortened due to poor lubrication and internal component load.

● **步骤2.使用环境的确认** Step 2. Confirm the use of the environment

确认项目 Confirm The Item	标准值 Standard Value
S_0 ---------- 环境温度 Ambient Temperature (℃)	-10~40
S_1 ---------- 减速机表面温度 Reducer surface temperature (℃)	60以下 Under

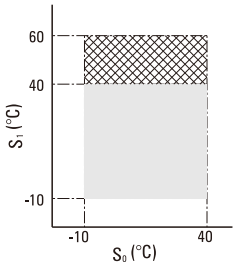

● **步骤3–1.研究减速机的负载** Step 3–1. Study the load of the reducer

设定项目 Set The Project		计算公式 Calculation Formula	选定例 Selected Example
① 计算惯性力矩。 Calculate the moment of inertia.			
I_R	载荷惯性力矩 Load moment of inertia (kgm^2)	$I_R = \frac{W_c}{12} \times \{(\frac{a}{1000})^2 + (\frac{b}{1000})^2\} + W_c \times (\frac{R}{1000})^2$	$I_R = \frac{490}{12} \times \{(\frac{500}{1000})^2 + (\frac{500}{1000})^2\} + 490 \times (\frac{320}{1000})^2$ $= 70.6 (kgm^2)$
② 进行稳定时转矩的研究。 Research on torque at stable.			
T_R	稳定时转矩 Steady torque (Nm)	$T_R = W_c \times 9.8 \times \frac{R}{1000}$	$T_R = 490 \times 9.8 \times \frac{320}{1000}$ $= 1537 (Nm)$

● **步骤3–2.请参见（P.55）(有关选定例请参考"水平方向旋转移动时"。）** Step 3–2. Please refer to (P.55) (Refer to "Horizontal Rotation Move" for the selected example.)

选定产品–型号代码的选定例
SELECTED PRODUCT - SELECTION OF MODEL CODE

● **步骤3–2.设定进行选定所需的项目** Step 3–2. Set the desired item to be selected

设定项目 Set The Project	计算公式 Calculation Formula	选定例（水平方向旋转移动时） Selected Example (When the horizontal direction is rotated)
③ 设定加减速时间、定速时间、各输出转速。 Set the acceleration and deceleration time, fixed speed, the output speed.		
t_1-------- 加速时间 Acceleration time (S) t_2-------- 稳定运转时间 Stable running time (S) t_3-------- 减速时间 Deceleration time (S) N_2------- 稳定时转速 Steady speed (rpm)	• 确定了运行模式后不需要进行研究。 After the operation mode is determined, no research is required. • 未确定运行模式时，通过以下公式研究运行模式参考。 When the operating mode is not determined, the operating mode reference is studied by the following formula. $t_1=t_3=$旋转时间 Rotation time【$t_1+t_2+t_3$】$-\dfrac{\theta}{\left(\dfrac{N_2}{60}\times 360\right)}$ $t_2=$旋转时间 Rotation time【$t_1+t_2+t_3$】$-(t_1+t_3)$ ※1. 将t_1和t_3作为相同的时间进行计算。 Calculate t_1 and t_3 as the same time. ※2. 减速机输出转速(N_2)不明时以$N_2=15$rpm进行选定。 When the output speed (N_2) of the gear unit is unknown, it is selected at $N_2=15$rpm. ※3. t_1、t_3在0以下时应提高输出转速或延长旋转时间。 t_1, t_3 below 0 should increase the output speed or extend the rotation time.	在本次设备研究中，由于减速机输出转速不明，所以以$N_2=15$rpm进行研究。 In this equipment research, because the reducer output speed is unknown, so to $N_2=15$rpm to study. $t_1=t_3=2.5-\dfrac{180}{\left(\dfrac{15}{60}\times 360\right)}=0.5(S)$ $t_2=2.5-(0.5+0.5)=1.5(S)$ $\therefore t_1=t_3=0.5(S)$ $t_2=1.5(S)$ $N_2=15(rpm)$
N_1------- 启动时平均转速 (rpm) Average speed at start-up	$N_1=\dfrac{N_2}{2}$	$N_1=\dfrac{15}{2}=7.5(rpm)$
N_3------- 停止时平均转速 (rpm) The average speed when stopped	$N_3=\dfrac{N_2}{2}$	$N_3=\dfrac{15}{2}=7.5(rpm)$
④ 计算加减速时的惯性转矩。 Calculate the inertia torque at the time of acceleration / deceleration.		
T_A------- 加速时的惯性转矩 (Nm) Acceleration moment of inertia	$T_A=\left\{\dfrac{I_R\times(N_2-0)}{t_1}\right\}\times\dfrac{2\pi}{60}$	$T_A=\left\{\dfrac{53.1\times(15-0)}{0.5}\right\}\times\dfrac{2\pi}{60}$ $=166.8(Nm)$
T_D------- 减速时的惯性转矩 (Nm) Deceleration moment of inertia	$T_D=\left\{\dfrac{I_R\times(0-N_2)}{t_3}\right\}\times\dfrac{2\pi}{60}$	$T_D=\left\{\dfrac{53.1\times(0-15)}{0.5}\right\}\times\dfrac{2\pi}{60}$ $=-166.8(Nm)$
⑤ 计算加减速时的负载转矩。 Calculate the load torque at the time of acceleration / deceleration.		
T_1------- 启动时的最大转矩 (Nm) Maximum torque at start-up	$T_1=\lvert T_A+T_R\rvert$ TR: 稳定时转矩 Steady torque 水平方向旋转移动时，参考P.53。 Refer to P.53 when rotating in the horizontal direction. 垂直方向旋转移动时，参考P.54。 Refer to P.54 when rotating in the vertical direction.	$T_1=\lvert 166.8+6.2\rvert$ $=173.0(Nm)$
T_2------- 稳定时的最大转矩 (Nm) The maximum torque when stabilized	$T_2=\lvert T_R\rvert$	$T_1=6.2(Nm)$
T_3------- 停止时的最大转矩 (Nm) The maximum torque at stop	$T_3=\lvert T_D+T_R\rvert$ TR: 稳定时转矩 Steady torque 水平方向旋转移动时，参考P.53。 Refer to P.53 when rotating in the horizontal direction. 垂直方向旋转移动时，参考P.54。 Refer to P.54 when rotating in the vertical direction.	$T_3=\lvert -166.8+6.2\rvert$ $=159.6(Nm)$
⑥ ——1 计算平均转速。 Calculate the average speed.		
N_m------ 平均转速 (rpm) Average speed	$N_m=\dfrac{t_1\times N_1+t_2\times N_2+t_3\times N_3}{t_1+t_2+t_3}$	$N_m=\dfrac{0.5\times 7.5+1.5\times 15+0.5\times 7.5}{0.5+1.5+0.5}$ $=12(rpm)$
⑥ ——2 计算平均负载转速。 Calculate the average load speed.		
T_m------- 平均负载转速 (rpm) Average load speed	$N_m=\sqrt[\frac{10}{3}]{\dfrac{t_1\times N_1\times T_1^{\frac{10}{3}}+t_2\times N_2\times T_2^{\frac{10}{3}}+t_3\times N_3\times T_3^{\frac{10}{3}}}{t_1\times N_1+t_2\times N_2+t_3\times N_3}}$	$T_m=\sqrt[\frac{10}{3}]{\dfrac{0.5\times 7.5\times 173^{\frac{10}{3}}+1.5\times 15\times 6.7^{\frac{10}{3}}+0.5\times 7.5\times 159.5^{\frac{10}{3}}}{0.5\times 7.5+1.5\times 15+0.5\times 7.5}}$ $=110.0(Nm)$

根据要求寿命研究减速机型号时请参见P.56。根据减速机型号计算耐用年限时请参见P.58。
Refer to P.56 when studying the reducer model according to the required life. Refer to P.58 when calculating the durability for the gear unit model.

选定产品–型号代码的选定例
SELECTED PRODUCT - SELECTION OF MODEL CODE

● **步骤4.选定减速机** Step 4. Selected Reducer

减速机的选定方法① "通过根据负载条件、要求寿命计算出额所需转矩选定减速机。"
Selection method of the reducer ① "The torque is selected by calculating the required torque according to the load condition and the required life."

设定项目/研究事项 Set The Project / Research matters	计算公式 Calculation Formula	选定例（水平方向旋转移动时） Selected Example (When the horizontal direction is rotated)
① 满足要求寿命,计算减速机额定转矩。 Meet the required life, calculate the rated torque of reducer.		
L_{ex}------- 要求寿命 (年) Required life (years)	根据使用条件 According to the conditions of use	5年 5 year
Q_{1cy}----- 1日的循环转速 (次) 1 day cycle speed (times)	$Q_{1cy}=\frac{Q_1 x60x60}{t_4}$	$Q_{1cy}=\frac{12x60x60}{20}$ =2160(次times)
Q_3------- 1日的减速机运转时间 (h) 1 day reducer running time (h)	$Q_3=\frac{Q_{1cy}x(t_1+t_2+t_3)}{60x60}$	$Q_3=\frac{2160x(0.5+1.5+0.5)}{60x60}$ =1.5(h)
Q_4------- 1年的减速机运转时间 (h) 1 year reducer running time (h)	$Q_4=Q_3xQ_2$	$Q_4=1.5x365$ =548(h)
L_{hour}----- 减速机耐用时间 (h) Reducer durable time (h)	$L_{hour}=Q_4xL_{ex}$	$L_{hour}=548x5$ =2740(h)
T_0------- 满足要求寿命的减速机额定转矩 Meet the required life of the reduc rated torque (Nm)	$T_0=T_m x(\frac{10}{3})\sqrt{\frac{L_{hour}}{K}x\frac{N_m}{N_0}}$ K: 减速机额定寿命 Reducer rated life (h) N_0: 减速机额定转矩 Speed reducer rated torque (rpm)	$T_0=110.3x^{(\frac{10}{3})}\sqrt{\frac{2740}{6000}x\frac{12}{15}}$ =81.5(Nm)
② 根据算出的额定转矩暂定减速机型号。 According to the calculated rated torque tentatively determine the reducer model.		
暂定减速机 Tentative reducer	请选定减速机的额定转矩【T_0】 ≥满足要求寿命的减速机额定转矩【$T_{0'}$】的减速机。 Please select the rated torque of the reducer 【T_0】 ≥ The reducer that meets the required life of the reducer rated torque【$T_{0'}$】. ※1.【T_0】: 请参考P.08额定值表。 Please refer to the P.08 rating table.	暂定 Tentative 【T_0】170(Nm)≥【$T_{0'}$】81.5(Nm)的150BX-RVE
③ 研究启动、停止时的最大转矩。 Study the maximum torque at start-up and stop.		
启动、停止时的最大转矩的研究 The study of maximum torque when start/stop	确认是否 Confirm whether or not 启动停止容许转矩【T_{S1}】≥启动时的最大转矩【T_1】 停止时的最大转矩【T_3】 Start stop allowable torque【T_{S1}】≥ Maximum torque at start-up 【T_1】 Maximum torque at stop【T_3】 ※1.【T_{S1}】: 请参考P.10额定值表。 Please refer to the P.10 rating table. ※2.【T_1】、【T_3】: 请参考P.55。Please refer to P.55.	由于 Due to【T_{S1}】410(Nm)≥【T_1】173.5(Nm) 【T_3】160.1(Nm) 没有问题。No problem.
④ 研究输出转速。 Study the output speed.		
N_{m0}----- 1个循环中的平均转速 (rpm) The average speed in one cycle	$N_{m0}=\frac{t_1xN_1+t_2xN_2+t_3xN_3}{t_4}$	$N_{m0}=\frac{0.5x7.5+1.5x15+0.5x7.5}{20}$ =1.5(rpm)
输出转速的研究 The study of output speed	确认是否 Confirm whether or not 容许输出转速(占空比100%)【N_{S0}】 ≥1个循环中的平均转速【N_{m0}】 Allowable output speed (duty cycle 100%)【N_{S0}】 ≥ the average speed in 1 cycle 【N_{m0}】 暂定的减速机规格超标时，改变减速机型号。 When the specified reducer specifications exceed the standard, change the reducer model. 另外，使用容许输出转速(占空比40%)为【N_{S1}】以上时，请向本公司咨询。When using the allowable output speed (40% duty cycle) for 【N_{S1}】, please consult our company. 标记:【N_{s0}】的值为在外壳温度60℃时30分钟内的平均转速。The value of 【N_{s0}】 is the average speed in 30 minutes at the enclosure temperature of 60℃. ※1.【N_{s0}】、【N_{S1}】: 请参考P.10。Please refer to P.10.	由于 Due to【N_{s0}】57(rpm)≥【N_{m0}】1.5(rpm) 没有问题。No problem.

选定产品–型号代码的选定例
SELECTED PRODUCT - SELECTION OF MODEL CODE

减速机的选定方法① "通过根据负载条件、要求寿命计算出额所需转矩选定减速机。"

Selection method of the reducer ① "The reducer is selected by calculating the required torque according to the load condition and the required life."

设定项目/研究事项 Set The Project / Research matters	计算公式 Calculation Formula	选定例（水平方向旋转移动时） Selected Example (When the horizontal direction is rotated)
⑤ 研究紧急停止时的冲击转矩。 Study the impact torque at the time of emergency stop.		
P_{em}------ 假设的紧急停止次数 (次) Assumed number of emergency stops (times)	根据使用条件 According to the conditions of use	例如，假设一个月发生一次紧急停止。 For example, suppose an emergency stop occurs once a month. 【P_{em}】=1x12x要求寿命 Require life (year)【L_{ex}】 =12x5=60 (次 Time)
T_{em}------ 紧急停止导致的冲击转矩 (Nm) Impact torque caused by emergency shock	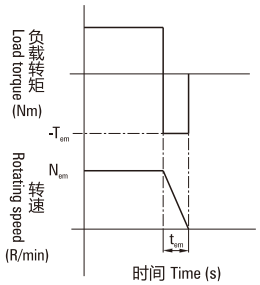 请将使用条件设定为，紧急停止导致的冲击转矩 【T_{em}】≤瞬时最大容许转矩【T_{S2}】。 Set the impact torque caused by emergency shock as use condition 【T_{em}】 ≤ Instantaneous maximum allowable torque【T_{S2}】.	例如 For example, 【P_{em}】=500(Nm)
N_{em}------ 紧急停止时的转速 (rpm) The speed when emergency stop		例如 For example, 【N_{em}】=15(rpm)
t_{em}------ 紧急停止时的减速时间 (s) Emergency deceleration time		例如 For example, 【t_{em}】=0.05(s)
Z_4------ 减速机的针齿销数 Number of pin pins of the reducer	机型(RVE系列) Model (RVE Series) / 针齿销数 Z_4 Needle Pin Count 120BX 30 150BX 40 35BX 40 190BX 40 65BX 40 220BX 40 250BX 40 280BX 40 320BX 40 370BX 40 机型(RVC系列) Model (RVC Series) / 针齿销数 Z_4 Needle Pin Count 10CBX 26 27CBX 26 50CBX 26 100CBX 26 120CBX 52 200CBX 28 320CBX 30 500CBX 29 - - - -	150BX-RVE的针齿销数: 40根 150BX-RVE pin number of pins: 40 root
C_{em}------ 冲击转矩的容许发生次数 The number of permissible occurrences of impact torque	$C_{em}=\dfrac{775x\{\frac{T_{S2}}{T_{em}}\}^{\frac{10}{3}}}{Z_4x\frac{N_{em}}{60}xt_{em}}$ ※1.【T_{S2}】: 瞬时最大容许转矩，请参考P.10额定值表。 Instantaneous maximum allowable torque, Please refer to the P.10 rating table.	$C_{em}=\dfrac{775x\{\frac{820}{500}\}^{\frac{10}{3}}}{40x\frac{15}{60}x0.05}$
紧急停止时冲击转矩的估算 Estimation of impact torque at emergency stop	确认是否 Confirm whether or not 冲击转矩的容许作用次数【C_{em}】≥设想的紧急停止的次数【P_{em}】。The number of allowable action of the impact torque【C_{em}】≥ the number of emergency stops expected【P_{em}】. 暂定的减速机规格超标时，改变减速机型号。 When the specified reducer specifications exceed the standard, change the reducer model.	由于 Due to【C_{em}】8060≥【P_{em}】60 没有问题。No problem.
⑥ 研究推力负荷以及力矩载荷。 Study the thrust load as well as the torque load.		
W_1------ 径向载荷 Radial load (N)	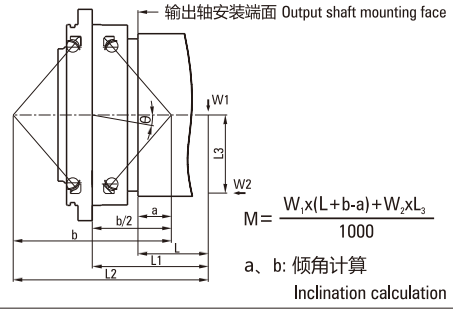 $M=\dfrac{W_1x(L+b-a)+W_2xL_3}{1000}$ a、b: 倾角计算 Inclination calculation	0(N)
L-------- 到径向载荷作用点的距离 (mm) The distance to the radial load point		0(mm)
W_2------ 推力负荷 Thrust load (N)		在本选定例中 In this selected case: $W_2=W_A+W_B=(180+20x4)x9.8$ =2548(N) ※1. W_A、W_B: 参考 Reference P.41。
L_3-------- 到推力负荷作用点的距离 (mm) The distance to the thrust load point		0(mm)(由于工件的重心在旋转轴上 As the center of gravity of the workpiece on the rotating shaft)
M ------- 力矩载荷 Torque load (Nm)		150BX-RVE由于a尺寸=20.1(mm)，b尺寸=113.3(mm) $M=\dfrac{0x(0+113.3-20.1)+2548x0}{1000}$ =0(Nm)
推力负荷以及力矩载荷的研究 Study on thrust load and torque load	根据P.51的容许力矩线图，确认 • 推力负荷 • 力矩载荷 是否在线图之内。 当W_1载荷作用于寸法b内时，请在容许径向载荷范围内使用。 Wr: 容许径向载荷、参考P.08-P.10额定值表。 暂定的减速机规格超标时，改变减速机型号。	在本次研究设备中 In this research equipment, 推力负荷 Thrust load【W_2】=2548(N) 力矩载荷 Moment load【M】=0(N) 由于在容许力矩线图内，没有问题。 There is no problem in the permissible torque line.

针对以上研究项目，选定满足使用条件的减速机型号。 根据电动机的转速、输入转矩、惯性力矩确定实际减速比。请确认电动机制造商。	根据至此为止的研究结果，选定150BX-RVE Based on the results so far, 150BX-RVE was selected.。

选定产品–型号代码的选定例
SELECTED PRODUCT - SELECTION OF MODEL CODE

减速机的选定方法② “暂定减速机的型号，计算耐用年限。”

Selection method of the reducer ② "The model of the reducer is tentatively calculated and the durability period is calculated."

设定项目/研究事项 Set The Project / Research matters	计算公式 Calculation Formula	选定例（水平方向旋转移动时） Selected Example (When the horizontal direction is rotated)
① 暂定任意的减速机型号。 Tentative arbitrary reducer model.		
减速机的暂定 Tentative reducer	任意选定 Arbitrarily selected	例如 For example, 暂定 Tentative 150BX-RVE。
② 研究启动、停止时的最大转矩。 Study the maximum torque at start-up and stop.		
启动、停止时的最大转矩的研究 The study of the maximum torque when start, stop	确认是否 Confirm whether or not 启动停止容许转矩【T_{S1}】≥启动时的最大转矩【T_1】 停止时的最大转矩【T_3】 Start stop allowable torque【T_{S1}】≥ Maximum torque at start-up【T_1】 Maximum torque at stop【T_3】 暂定的减速机规格超标时，改变减速机型号。 When the specified reducer specifications exceed the standard, change the reducer model. ※1.【T_{S1}】：请参考P.08额定值表。 Please refer to the P.08 rating table. ※2.【T_1】、【T_3】：请参考P.55。Please refer to P.55.	由于 Due to【T_{S1}】410(Nm)≥【T_1】173.5(Nm) 【T_3】160.1(Nm) 没有问题。No problem.
③ 研究输出转速。 Study the output speed.		
N_{m0}------ 1个循环中的平均转速 (rpm) The average speed in one cycle	$N_{m0}=\frac{t_1xN_1+t_2xN_2+t_3xN_3}{t_4}$	$N_{m0}=\frac{0.5x7.5+1.5x15+0.5x7.5}{20}$ =1.5(rpm)
输出转速的研究 The study of output speed	确认是否 Confirm whether or not 容许输出转速(占空比100%)【N_{S0}】 ≥1个循环中的平均转速【N_{m0}】 暂定的减速机规格超标时，改变减速机型号。 另外，使用容许输出转速(占空比40%)为【N_{S1}】以上时，请向本公司咨询。 标记:【N_{s0}】的值为在外壳温度60℃时30分钟内的平均转速。※1.【N_{s0}】、【N_{S1}】：请参考P.08-P.09。	由于 Due to【N_{S0}】75(rpm)≥【N_{m0}】1.5(rpm) 没有问题。No problem.
④ 研究紧急停止时的冲击转矩。 Study the impact torque at the time of emergency stop.		
P_{em}------ 假设的紧急停止次数 (次) Assumed number of emergency stops (times)	根据使用条件 According to the conditions of use	例如，假设一个月发生一次紧急停止。 For example, suppose an emergency stop occurs once a month. 【P_{em}】=1x12x要求寿命 Require life (year)【L_{ex}】 =12x5=60(次 Time)
T_{em}------- 紧急停止导致的冲击转矩 (Nm) The impact torque caused by emergency shock	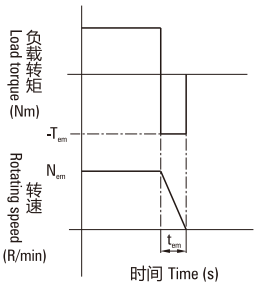 请将使用条件设定为，紧急停止导致的冲击转矩【T_{em}】≤瞬时最大容许转矩【T_{S2}】。 Set the impact torque caused by emergency shock as use condition【T_{em}】≤ Instantaneous maximum allowable torque【T_{s2}】.	例如 For example,【P_{em}】=500(Nm)
N_{em}------ 紧急停止时的转速 (rpm) The speed when emergency stop		例如 For example,【N_{em}】=15(rpm)
t_{em}------ 紧急停止时的减速时间 (s) Emergency deceleration time		例如 For example,【t_{em}】=0.05(s)
Z_4-------- 减速机的针齿销数 Number of pin pins of the reducer	机型(RVE系列) Model (RVE Series) / 针齿销数 Z_4 Needle Pin Count 120BX 30 150BX 40 35BX 40 190BX 40 65BX 40 220BX 40 250BX 40 280BX 40 320BX 40 370BX 40 机型(RVC系列) Model (RVC Series) / 针齿销数 Z_4 Needle Pin Count 10CBX 26 27CBX 26 50CBX 26 100CBX 26 120CBX 52 200CBX 28 320CBX 30 500CBX 29 - - - -	150BX-RVE的针齿销数: 40根 150BX-RVE pin number of pins: 40 root
C_{em}------ 冲击转矩的容许发生次数 The number of permissible occurrences of impact torque	$C_{em}=\frac{775x\{\frac{T_{S2}}{T_{em}}\}^{\frac{10}{3}}}{Z_4x\frac{N_{em}}{60}xt_{em}}$ ※1.【T_{S2}】：瞬时最大容许转矩，请参考P.08额定值表。Refer to P.08 about the instantaneous maximum allowable torque.	$C_{em}=\frac{775x\{\frac{820}{500}\}^{\frac{10}{3}}}{40x\frac{15}{60}x0.05}$
紧急停止时冲击转矩的估算 Estimation of impact torque at emergency stop	确认是否 Confirm whether or not 冲击转矩的容许作用次数【C_{em}】≥设想的紧急停止的次数【P_{em}】。 暂定的减速机规格超标时，改变减速机型号。	由于 Due to【C_{em}】8060≥【P_{em}】60 没有问题。No problem.

选定产品–型号代码的选定例
SELECTED PRODUCT - SELECTION OF MODEL CODE

减速机的选定方法②“暂定减速机的型号，计算耐用年限。”

Selection method of the reducer ② "The model of the reducer is tentatively calculated and the durability period is calculated."

设定项目/研究事项 Set The Project / Research matters	计算公式 Calculation Formula	选定例（水平方向旋转移动时） Selected Example (When the horizontal direction is rotated)
⑤ 研究推力负荷以及力矩载荷。 Study the thrust load as well as the moment load.		
W_1------ 径向载荷 Radial load (N)	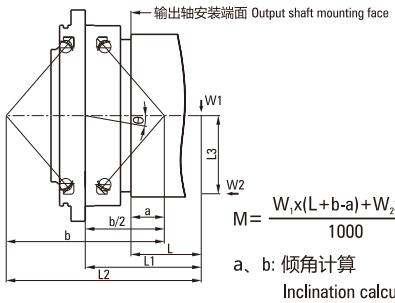	0(N)
L-------- 到径向载荷作用点的距离 (mm) The distance to the radial load point		0(mm)
W_2------ 推力负荷 Thrust load (N)		W_2=(180+20x4)x9.8 =2548(N)
L_3-------- 到推力负荷作用点的距离 (mm) The distance to the thrust load point	$M=\frac{W_1x(L+b-a)+W_2xL_3}{1000}$	0(mm)(由于工件的重心在旋转轴上 As the center of gravity of the workpiece on the rotating shaft)
M ------- 力矩载荷 Moment load (Nm)	a、b: 倾角计算 Inclination calculation	150BX-RVE由于a尺寸=20.1(mm)，b尺寸=113.3(mm) $M=\frac{0x(0+113.3-20.1)+2548x0}{1000}$ =0(Nm)
推力负荷以及力矩载荷的研究 Study on thrust load and torque load	根据P.72的容许力矩线图，确认・推力负荷・力矩载荷 Refer P.72 allowable torque line, confirm the thrust load, torque load. 是否在线图之内。Whether in the line. 当W_1载荷作用于寸法b内时，请在容许径向载荷范围内使用。 When W1 load to b, please use within allowable radial load. Wr: 容许径向载荷、参考P.08-P.10额定值表。 Refer P.08-P.10 rated valve chart, Wr: allowable radial load. 暂定的减速机规格超标时，改变减速机型号。 When the specified reducer specifications exceed the standard, change the reducer model.	在本次研究设备中 In this research equipment, 推力负荷 Thrust load【W_2】=2548(N) 力矩载荷 Moment load【M】=0(N) 由于在容许力矩线图内，没有问题。 There is no problem in the permissible torque line.
⑥ 研究减速机的耐用年限。 Study the durability of reducer.		
L_h------- 寿命时间 Life time (h)	$L_h=6000x\frac{N_0}{T_m}x\{\frac{T_0}{T_m}\}^{\frac{10}{3}}$	$L_h=6000x\frac{15}{12}x\{\frac{170}{110.3}\}^{\frac{10}{3}}$ =31718(h)
Q_{1cy}----- 1日的循环转速 (次) 1 day cycle speed (times)	$Q_{1cy}=\frac{Q_1x60x60}{t_4}$	$Q_{1cy}=\frac{12x60x60}{20}$ =2160(次times)
Q_3------- 1日的减速机运转时间 (h) 1 day reducer running time (h)	$Q_3=\frac{Q_{1cy}x(t_1+t_2+t_3)}{60x60}$	$Q_3=\frac{2160x(0.5+1.5+0.5)}{60x60}$ =1.5(h)
Q_4------- 1年的减速机运转时间 (h) 1 year reducer running time (h)	$Q_4=Q_3xQ_2$	Q_4=1.5x365 =548(h)
L_{year}----- 减速机的耐用年限 (年) Durability of reducer (years)	$L_{year}=\frac{L_h}{Q_4}$	$L_{year}=\frac{31718}{548}$ =57.8(年year)
L_{ex}------- 要求寿命 (年) Required life (years)	根据使用条件 According to the conditions of use	5年 5 year
耐用年限的研究 Research on durable years	确认是否 Confirm whether or not 【L_{ex}】≥【L_{year}】。 暂定的减速机规格超标时，改变减速机型号。 When the specified reducer specifications exceed the standard, change the reducer model.	由于 Due to【L_{ex}】5 (year)≤【L_{year}】57.8(year) 没有问题。No problem.

针对以上研究项目，选定满足使用条件的减速机型号。 For the above research projects, selected to meet the conditions of use of the reducer model. 根据电动机的转速、输入转矩、惯性力矩确定实际减速比。请确认电动机制造商。 According to the motor speed, input torque, inertia torque to determine the actual reduction ratio. Please confirm the motor manufacturer.	根据至此为止的研究结果，选定150BX-RVE。 Based on the results so far, 150BX-RVE was selected.

选定产品–型号代码的选定例
SELECTED PRODUCT - SELECTION OF MODEL CODE

● 电动机的转矩限制 Torque Limit Of The Motor

为了不让作用于减速机的冲击转矩超过瞬时最大容许转矩值，需要对电动机的转矩值设定限制。
In order to prevent the impact torque acting on the reducer from exceeding the instantaneous maximum allowable torque value, it is necessary to set a limit on the torque value of the motor.

设定项目/研究事项 Set The Project / Research matters	计算公式 Calculation Formula	选定例（水平方向旋转移动时） Selected Example (When the horizontal direction is rotated)
T_{m1}-------- 电动机瞬时最大转矩 (Nm) Maximum instantaneous torque of the motor	由电动机规格决定。 According to the motor specifications.	例如 For example: TM1＝10(Nm)
T_{M10UT}----- 减速机输出轴最大发生转矩 (Nm) The maximum torque of the gearbox output shaft (因紧急停止以及电动机停止而受到外部冲击时) (Due to emergency stop and the motor stopped by the external red hit time)	$T_{M10UT}=T_M x R x \frac{100}{\eta}$ R: 实际减速比。 Actual reduction ratio. η: 启动效率(%)，参考P.08-P.09额定值表。 Start efficiency (%), refer to P.08-P.09 rating table.	例如，根据选定150BX-RVE-161K时的规格计算。 For example, Calculated according to the specifications when 150BX-RVE-161K is selected. $T_{M10UT}=10x161x\frac{100}{80}$ $=2012(Nm)$
T_{M20UT}----- 减速机输出轴最大发生转矩 (Nm) The maximum torque of the gearbox output shaft (输出轴与障碍物相撞而受到冲击时) (The impact caused by output shaft impacts the obstacle)	$T_{M20UT}=T_{M1} x R x \frac{\eta}{100}$	$T_{M20UT}=10x161x\frac{80}{100}$ $=1288(Nm)$
电动机转矩值的限制 Limit of motor torque value	确认是否 Confirm whether or not 瞬时最大容许转矩【T_{S2}】 Instantaneous maximum permissible torque【T_{S2}】 ≥减速机输出轴最大发生转矩【T_{M10UT}】、【T_{M20UT}】。 ≥The maximum torque of the output shaft of the gear unit【T_{M10UT}】,【T_{M20UT}】. 不能满足以上算式时，对电动机的最大转矩值进行限制。 When the above formula can not be satisfied, Limit the maximum torque valve of the motor. 【T_{s2}】: P.09-P.10定格表参照。 P.09-P.10 fixed table reference.	由于 Due to【T_{S2}】820(Nm)≤【T_{M10UT}】2012(Nm) 【T_{M20UT}】1288(Nm) 因此对电动机设定转矩限制。 So the torque limit is set for the motor.

选定产品–线图
SELECTED PRODUCT - LINE GRAPH

容许力矩线图 Permissible Torque Line Diagram

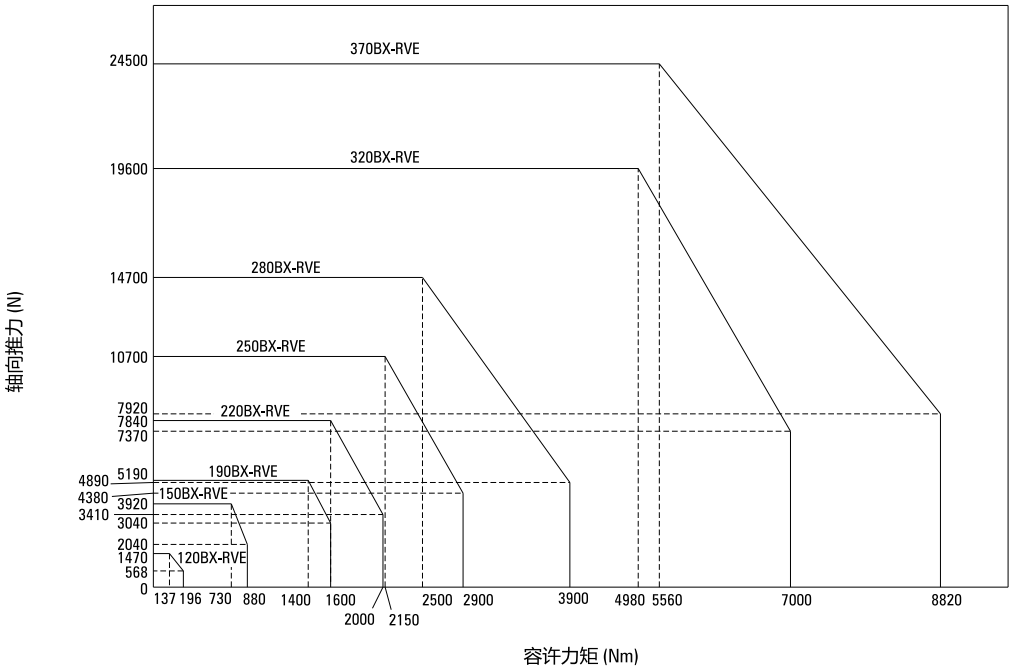

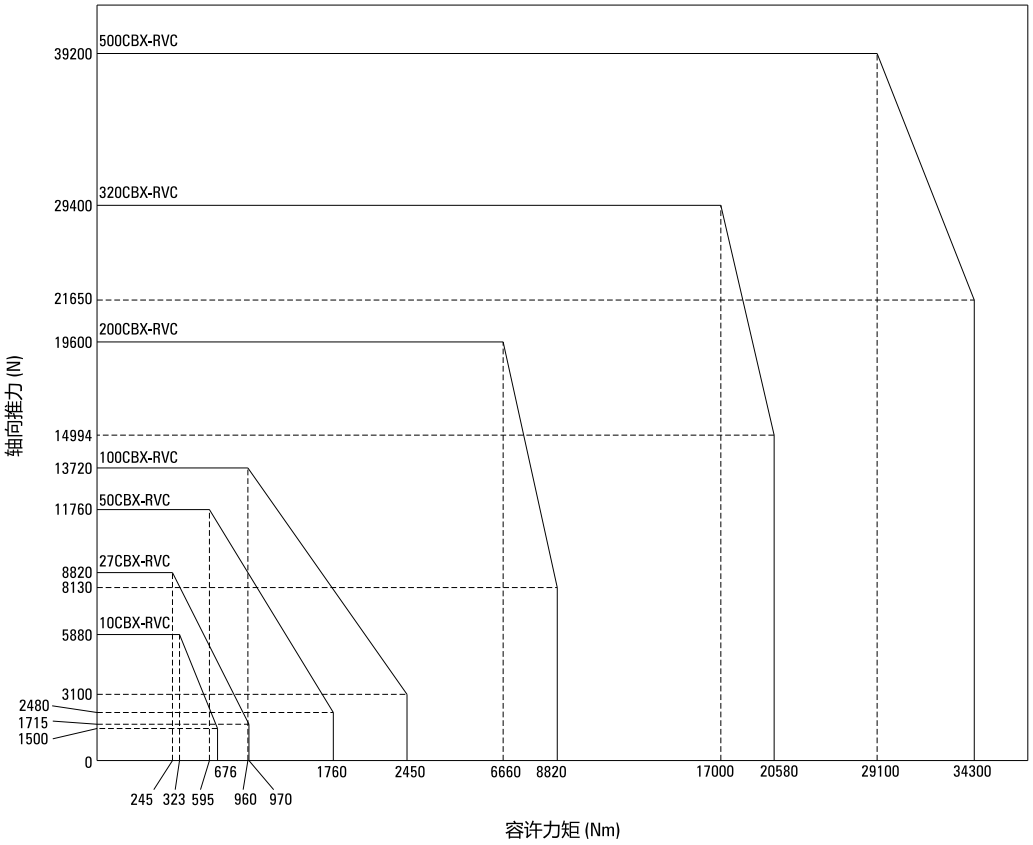

安全使用注意事项
SAFE USE

警告：表示操作错误可能会导致人员死亡或负重伤 Warning: Indicates that an operating error can cause a person to die or be seriously injured

注意：表示操作错误可能会导致人员受伤及财产损失 Be careful: Indicates that the operation error may cause injuries and property damage

设计注意事项 Design Considerations 进行设计时，请务必阅读本产品目录。When designing, please be sure to read the product catalog.			
注意 Be careful	**请在规定环境下使用。** 使用摆线针轮RV减速器时，请遵守以下条件。 •环境温度：0～40℃ •无腐蚀性、爆炸性汽车 •不溅到水、油等 •无金属粉等灰尘 **Please use in the specified environment.** When using the RV planetary gear box, please observe the following conditions. •Ambient temperature: 0～40℃ •No corrosive, explosive car •Do not splash water, oil, etc. •No dust and other dust	注意 Be careful	**请使用规定的方法安装。** •组装方法、顺序，请按产品目录正确实施。 •拧紧方法（使用螺栓等），请遵守本公司建议。 •如未正确组装，运转时可能会导致振动、缩短使用寿命、精度下降、损坏等故障。 **Please use the specified method of installation.** •Assembly method, order, according to the correct implementation of product catalog. •Tighten the method (using bolts, etc.), please follow the company's recommendations. •If not properly assembled, running may lead to vibration, shorten the life of the service, the accuracy of the decline, damage, etc..
注意 Be careful	**请根据规定精度实施安装。** •请正确设计、组装各种部件，确保其能够达到产品目录中的推荐安装精度。 •达不到规定精度可能会导致振动、缩短使用寿命、精度下降、损坏等故障。 **Please implement the installation according to the specified accuracy.** •Correct design and assembly of components to ensure that it is able to achieve the recommended installation accuracy in the product catalog. •Can not reach the specified accuracy may lead to vibration, shorten the life of the service, the accuracy of the decline, damage, etc..	注意 Be careful	**请使用规定的润滑剂。** •不使用本公司推荐的润滑剂，可能会缩短产品的使用寿命。此外，请按规定的条件更换润滑剂。 •组合型产品已预先封入润滑脂。请不要混入其它润滑脂。 **Please use the prescribed lubricant.** •Lubricants that are not recommended by the company may shorten the service life of the product. In addition, please replace the lubricant according to the prescribed conditions. •The products have been pre-combined into grease. Please do not mix with other grease.

设计注意事项 Design Considerations 执行运转时，请务必阅读产品目录。When running, please be sure to read the product catalog.			
注意 Be careful	**请小心使用产品及部件。** •请勿使用锤子等用力敲打各部件及组合单元。此外，请确保不会因坠落等原因导致裂纹、瘪痕等。否则会导致产品破损。 •在破损状态下使用时，无法保证其性能。还可能会导致损坏等故障。 **Please be careful to use the products and components.** •Do not use a hammer and other hard hit the components and combination unit. In addition, make sure not to fall and other causes of cracks, such as indentation. Otherwise it will cause damage to the product. •When used in the damaged condition, its performance can not be guaranteed. Can also cause damage and other faults.	注意 Be careful	**使用时，请勿超出容许转矩。** •施加转矩请不要超出瞬间容许最大转矩。否则可能会出现拧紧部螺栓的松动、产生晃动、破坏等，导致产品故障。 •如果输出轴直接连接关节臂等，有可能因关节臂碰撞而导致破损，输出轴不能控制。 **When in use, please do not exceed the allowable torque.** •Applying torque please do not exceed the maximum torque. Otherwise, it may be possible to tighten the bolt of the screw loose, shaking, damage, etc., resulting in product failure. •If the output shaft is directly connected to the joint arm, it is possible to cause damage due to the collision of the joint arm, and the output shaft can not be controlled.
注意 Be careful	**请勿变更部件配套。** •本产品的各部件是配套加工而成。 •混同其它套件使用时，无法保证其能够发挥特定性能。 **Do not change parts.** •All parts of this product are processed and processed. •With other packages when used, can not guarantee that it can play a specific performance.	注意 Be careful	**请勿拆解组合型产品。** •严禁对组合型产品实施拆解、重新组装。否则，将无法恢复其原有性能。 **Do not disassemble the combined products.** •It is strictly prohibited to disassemble and re assemble the assembled products. Otherwise, it will not be able to restore its original performance.

设计注意事项 Design Considerations

执行运转时，请务必阅读产品目录。When running, please be sure to read the product catalog.

警告 Warning	**请勿将手指插入前段部并转动减速机。** •将手指插入前段部件并转动减速机时，手指可能会被齿轮绞入，造成意外受伤。严禁此操作。 **Do not insert your finger into the front end and turn the speed reducer.** •When the finger is inserted into the front part and rotates the speed reducer, the finger can be twisted into the gear to cause the accident injury. This operation is strictly prohibited.	注意 Be careful	**发现异常时，请停止系统运行。** •设备发出异常声音及出现振动、停止运转、出现异常发热及异常电流值等时，请立即停止系统运行。否则可能会对系统造成严重影响。 **When the exception is found, please stop the system running.** •Equipment abnormal sound and the emergence of vibration, stop running, abnormal heating and abnormal current value, please immediately stop the system running. Otherwise, it may have a serious impact on the system.
警告 Warning	**型号较大的产品为重型设备。请小心使用。** •由于设备较重，使用时可能会造成腰疼、坠落、倒地、夹伤等人员伤害。使用时，在采取穿着安全鞋等防护措施的同时，请使用支撑工具。 **Model large products for heavy equipment. Please be careful to use.** •Because the equipment is heavy, may cause back pain, fall, fell to the ground, crush injuries when using etc.. In use, in the use of safety shoes and other protective measures, please use the support tool.	注意 Be careful	•请注意，虽然产品出厂时已采取防锈措施，但根据用户的保管环境不同，可能会出现提前生锈的现象。本公司的部分产品进行了黑色表面处理，但并不保证能够防锈。 •Please note that although the products have been factory to take rust measures, but according to the user's storage environment is different, may occur in advance of the phenomenon of rust. Part of the company's products are black surface treatment, but does not guarantee to be able to rust.

润滑剂的使用 Use Of Lubricants

警告 Warning	**使用注意事项** •溅入眼睛可能会引起炎症。使用时，请佩戴防护眼镜等，避免溅入眼睛。 •接触皮肤可能会引起炎症。操作时，请佩戴防护手套等，避免接触到皮肤。 •请勿食用。（食用后会引起腹痛、呕吐）。 •打开容器时，请注意不要划伤手指。请戴好防护手套。 •请放在儿童够不到的地方。 **Use matters needing attention** •Splashing into the eyes can cause inflammation. When using, please wear protective glasses, etc., to avoid splashing into the eyes. •Contact with skin may cause inflammation. When operating, please wear protective gloves, etc., to avoid contact with the skin. •Do not eat. (can cause abdominal pain, vomiting after eating). •When opening the container, please be careful not to scratch your fingers. Please wear protective gloves. •Please put it in a place where children can't reach.	注意 Be careful	**废油、废容器的处理** •法令规定了使用者有义务实施的处理方法。请按照相关法律法规进行正确处理。 •不清楚时，请先咨询授权代理商，然后再做处理。 •请勿对空的容器施加压力，可能会导致其破裂。 •请勿对容器进行焊接、加热、开孔或裁切。否则，可能会发生爆炸，里面的残留物会起火燃烧。 **Waste oil and waste containers** •The Act provides the user with the obligation to implement the treatment method. Please deal with the relevant laws and regulations. •If you don't know, please consult the authorized agent first, and then do the processing. •Do not put pressure on the empty container, may cause its rupture. •Do not weld, heat, open or cut the container. Otherwise, there could be an explosion, and the residue inside will burst into flames.
警告 Warning	**应急处理** •万一溅入眼睛，请立即使用清水冲洗15分钟，并接受医生的治疗。 •万一接触到皮肤，请使用水及肥皂充分清洗。 •万一发生吞食，请不要用力让其呕吐，应立即接受医生治疗。 **Emergency Management** •In case of splashing into the eyes, rinse immediately with water for 15 minutes and receive a doctor's treatment. •In case of exposure to the skin, please use water and soap to fully clean. •In case of swallowed, please do not make any effort to vomiting, should immediately accept the doctor's treatment.	注意 Be careful	**保管方法** •使用后，请将其密封好，防止灰尘，水分等混入。请在背阴处保存，避免阳光直射。 **Keeping method** •After use, please seal it well, to prevent dust, moisture and other mixed. Please keep in the shade, avoid direct sunlight.

关于报废 About Scrap

注意 Be careful	**请按工业废弃物标准进行处理** •报废时，请按工业废弃物进行处理。	**Please deal with industrial waste** •When scrap, please according to the industrial waste disposal.

订购时确认事项
CONFIRMATION OF ORDER

订购时确认事项 Confirmation Of Order					
使用部位 Use site					
机械名称 Mechanical name:			用途 Purpose:		
型号 Model:	BX				
负载条件 Load condition					
载荷 Load:	径向 Radial: (kg)	力臂长 The long arm:	(m)	轴向 Axial:	(kg)
运转时间 Running time:	连续 Continuity: (s)	停止 Stop it:	(s)	正反转 Positive inversion:	是□ 否□
输出转速 Output speed:	(r/min)				
启动转矩 Starting torque:	(Nm)	停止转矩 Stop torque:	(Nm)	稳定转矩 Stable torque:	(Nm) Max.
使用环境 Use environment					
温度 Temperature:	(℃)	湿度 Humidity:	%	其它 Other:	
安装方法 Installation method					
水平 Level	□	垂直（电机在上） Vertical (motor)	□	垂直（电机在下） Vertical (motor):	□

安装简图 Installation diagram:

输入齿轮轴规格 Input gear shaft size			
型式 Type:	A □ B □ Z(附图Figure) □	电机轴径X长度 Motor shaft diameter X length:	Φ □ X □ L □
减速比 Reduction ratio:		其它 Other:	

输入轴简图 Input shaft diagram:

电机规格 Motor specifications					
型号 Model:					
功率 Power:	(kw)	转速 Speed:	(r/min)	额定转矩 Rated torque:	(Nm)
止口 Stop:	(mm)	螺孔 Screw:	(PCD)		M X
其它 Other					
输入法兰 Input flange	□	输出法兰 Output flange	□		
润滑脂 Grease	□	润滑油 Lubricating oil	□		

其它事宜 Other matters:

订购时确认事项
CONFIRMATION OF ORDER

订购时确认事项 Confirmation Of Order					
使用部位 Use site					
机械名称 Mechanical name:			用途 Purpose:		
型号 Model:	BX				
负载条件 Load condition					
载荷 Load:	径向 Radial: (kg)	力臂长 The long arm:	(m)	轴向 Axial:	(kg)
运转时间 Running time:	连续 Continuity: (s)	停止 Stop it:	(s)	正反转 Positive inversion:	是□ 否□
输出转速 Output speed:	(r/min)				
启动转矩 Starting torque:	(Nm)	停止转矩 Stop torque:	(Nm)	稳定转矩 Stable torque:	(Nm) Max.
使用环境 Use environment					
温度 Temperature:	(℃)	湿度 Humidity:	%	其它 Other:	
安装方法 Installation method					
水平 Level	□	垂直（电机在上） Vertical (motor)	□	垂直（电机在下） Vertical (motor):	□

安装简图 Installation diagram:

输入齿轮轴规格 Input gear shaft size			
型式 Type:	A □ B □ Z(附图Figure) □	电机轴径X长度 Motor shaft diameter X length:	Φ □ X □ L □
减速比 Reduction ratio:		其它 Other:	

输入轴简图 Input shaft diagram:

电机规格 Motor specifications					
型号 Model:					
功率 Power:	(kw)	转速 Speed:	(r/min)	额定转矩 Rated torque:	(Nm)
止口 Stop:	(mm)	螺孔 Screw:	(PCD)		M X
其它 Other					
输入法兰 Input flange	□	输出法兰 Output flange	□		
润滑脂 Grease	□	润滑油 Lubricating oil	□		

其它事宜 Other matters:

ZD® 中大力德

CATALOGUE

PLANETARY GEAR BOX

ZB/ZE系列
高精度行星减速机

中大力德

PLANETARY GEAR BOX

ZDR/ZDGF(S)系列
高精度行星减速机

中大力德

PLANETARY GEAR BOX

ZDE/ZDF/ZDWE/ZDWF/ZDS系列
高精度行星减速机

中大力德

AC & DC GEAR MOTOR

微型交、直流减速电动机

中大力德

AC & DC RIGHT ANGLE GEAR MOTOR

交、直流直角轴减速电动机

中大力德

SMALL AC GEAR MOTOR

小型交流平行轴齿轮减速电机

中大力德

www.zd-motor.com ›››

中大力德

CYCLOIDAL PIN WHEEL PRECISION REDUCER

宁波中大力德智能传动股份有限公司
NINGBO ZHONGDA LEADER INTELLIGENT TRANSMISSION CO.,LTD.
地址：浙江省慈溪高新技术产业开发区新兴一路185号
Add： NO.185 1st Xinxing Road,New Industrial Zone, Cixi City, Zhejiang, China.

宁波中大创远精密传动设备有限公司
ZHONGDA CHUANGYUAN PRECISE TRANSMISSION EQUIPMENT CO.,LTD.
地址：浙江省宁波杭州湾新区金慈路159号
Add： No.159 Jinci Road, Hangzhou Bay District, Ningbo, Zhejiang, China.

国内贸易服务：
电话：0574-63537377
传真：0574-63534879
E-mail: china@zd-motor.com

国际贸易服务：
International trade department:
Tel: 86-574-63530538 Fax: 86-574-63534879
E-mail: manager@zd-motor.com
E-mail: trade@zd-motor.com

更多详情，敬请浏览： GO
www.zd-motor.com