DC BRUSHLESS GEAR MOTOR

微型永磁无刷齿轮减速电机

中大力德

中大 实现自动化应用的无限可能

Zhongda Realizes the infinite possibility in automation application

宁波中大力德智能传动股份有限公司始创于1998年，是一家集电机驱动、微特电机、精密减速器、机器人结构本体及一体化智能执行单元的研发、制造、销售、服务于一体的国家高新技术企业。公司注册资本10400万元，分、子公司9家，员工1800余人，2017年8月在深交所主板上市，股票代码：002896。

公司系国家级高新技术企业，主导和参与起草国家标准10项，行业标准5项；授权专利107项，其中发明专利11项。拥有机械工业精密齿轮减速电机工程研究中心、浙江省级高新技术企业研究开发中心、浙江省级企业技术中心。

公司立足于智能化、自动化装备核心零部件设计和制造，为客户提供智能驱动解决方案。公司产品以其差异化和高性价比优势，广泛应用于工作母机、数控设备、工业机器人、智能物流、新能源、食品、包装、纺织、电子、医疗、通讯、农牧等机械装备领域。在替代进口产品的基础上，逐步参与国际竞争。

Ningbo Zhongda Leader Intelligent Transmission Co., Ltd. was founded in 1998. It is an electromechanical automation enterprise integrating R&D, manufacturing, sales and service of motor drives, micro motors, precision reducers and integrated products. It has 9 branches and subsidiaries, over 1,800 employees, and a registered capital of 104 million yuan. In August 2017, it was listed on the A-shares of the Shenzhen Stock Exchange (stock code 002896).

The company is a national-level high-tech enterprise, leading and participating in the drafting of 10 national standards and 5 industry standards, maintaining 107 patents and 11 invention patents. It’s owning a Zhejiang-level enterprise R&D center.

The company is based on intelligent and automation equipment core component manufacturers and design solution providers. With its differentiated and cost-effective advantages, the company's products are widely used in industrial robots, intelligent logistics, new energy, machine tools and other fields, as well as special machinery and equipment for food, packaging, textiles, electronics, and medical treatment. On the basis of realizing domestic substitution of imported products, gradually participate in international competition.nd medical treatment. On the basis of realizing domestic substitution of imported products, gradually participate in international competition.

微型永磁无刷齿轮减速电机
DC BRUSHLESS GEAR MOTOR

轻松、简单，实现速度控制。
Easy And Simple To Achieve Speed Control.

- 控制器
  Controller
- 永磁无刷平行轴减速电机
  DC brushless parallel shaft speed reducing motor
- L型永磁无刷减速电机
  L type brushless DC motor

永磁无刷电机特性曲线说明
Description Of Brushless DC Motor Characteristic Curve

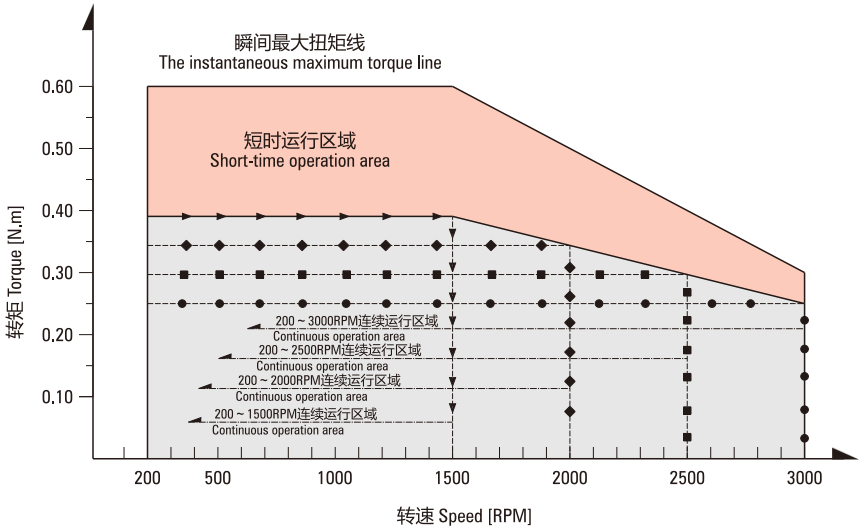

- **瞬时最大扭矩线：**电机启动、瞬间冲击负载的最大扭矩；超越此转矩值时，会引起驱动器的过流保护，造成停机；
- **短时运行区：**电机不同转速时，可在此力矩区间内短时运行，时间过长易引起电机发热，从而造成烧机或驱动过热保护启动，造成停机；
- **额定运行扭矩线：**电机在不同转速下的额定力矩，可在此力矩下长时间运行；
- **连续运转区：**在不同转速时，电机在此相应区间内连续运行。
- The maximum of instaneeous torque line: the motor starting the maximum torque of motor , instantaneous impact load; beyond the torque value, over-current protection will lead to stop.
- Short-term running area: when the motor at different speed, it can operate in a short time during this torque range. but after a long time it can cause heating of the motor, resulting motor break or drive overheat protection start, cause stopping working.
- Rated torque Rated torque of the motor line: at different speeds, the motor can run for a long time in this moment.
- In Continuous operation area: at different speed, the motor can operate continuous.

产品特点
PRODUCT FEATURES

无刷电机的基本特点 The Characteristics Of Brushless Motor Suitable For Speed Control Are Introduced

无刷电机上，无需使用通常被认为是DC电动机缺点的刷子和整流子等机械触点，DC电动机使用刷子和整流子进行旋转，因此需要定期进行维护；而无刷电动机使用霍尔IC检测到的信号，利用驱动电路的晶体管的ON/OFF进行旋转，因此无需维护。

On brushless motor ,it is unecessarily using brush ,commutator and any other mechanical contact. Brush motor need brush and commutato to running ,so it need to regular maintain. However , brushless motor used Hall IC to detect the signal and used driving circuit of crystal catheter's ON/OFF. So it dispense with maintain.

可进行稳定的速度控制 Stable Speed Control

无刷电动机持续对设定速度和来自电动机的速度反馈信号进行对比，来调节施加到电动机上的电压；因此，即使负载状况发生变化，仍可以从低速瞬间调整到设定速度，并以此稳定的速度运行。使用变频器控的三相感应电动机不进行反馈控制，因此负载变大时，速度会大幅下降；对于速度稳定性要求较高的用途，建议使用无刷电动机。

Brushless DC motors compare the setting speed with the speed feedback signals from the motor at all times and adjust the motor's applied voltageFor this reason, even if the load changes, stable rotation is performed from low speed to high speed.Common inverter-controller three-phase induction motors do not have this type of feedback control and when the load changes, the speed can be affected. Brushless DC motors are recommended for applications that require the speed to be maintained regardless of the load fluctuation.

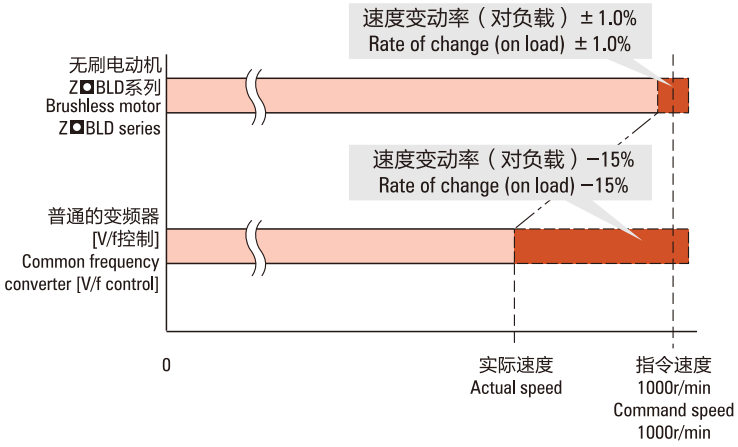

宽广的速度控制范围 Wide Speed Control Range

无刷电动机的速度控制范围比AC调速电动机及变频器更广，由于不像AC调速电动机那样在低速时有使用转矩限制，因此，无刷电动机适用于从低速到高速都需要一定转矩的用途。

The brushless DC motor has a broader speed control range compared to three-phase inverter driven motors. Unlike three-phase inverter driven motors, the torque at low speed isnot limited, so brushless DC motors are suited for applications that require constant.

产品样式 Product Style	速度控制范围 Speed Control Range	速度比 Rate Ratio
无刷电动机 Brushless motor	80～3000	50
变频器控制 Frequency converter control 三相感应电动机 Three phase induction motor	200～2400	12
AC调速电动机 AC speed regulating motor	50Hz: 90～1400	15
	60Hz: 90～1600	17

有助于节能 Saving Energy

无刷电动机的转子使用了永磁铁，可减少转子的二次损耗，因此与采用变频控制的三相感应电动机相比，耗电量减少约23%，有助于装置的节能。

DC Brushless motor used permanent magnets, it can reduce the secondary loss of rotor. So compared with adopts frequency conversion control of three-phase induction motor, the power reduced 23%. This is in favour of saving energy.

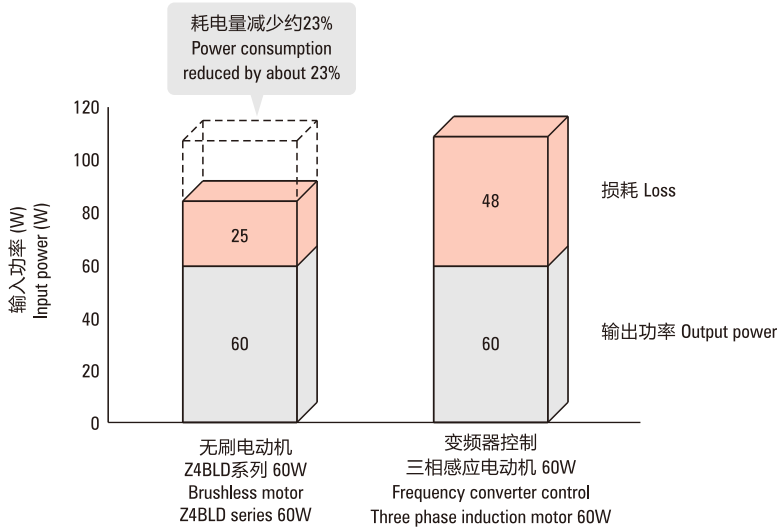

低速大力矩性能 Low Speed And High Torque Performance

永磁无刷减速电机低速时可维持大力矩连续运行，且运行平稳。DC brushless motor have a steady big torque when running at low speed.

● Z5BLD120-220GU-30S 曲线图 Diagram
(ZD标准驱动器 ZD Standard Drive)

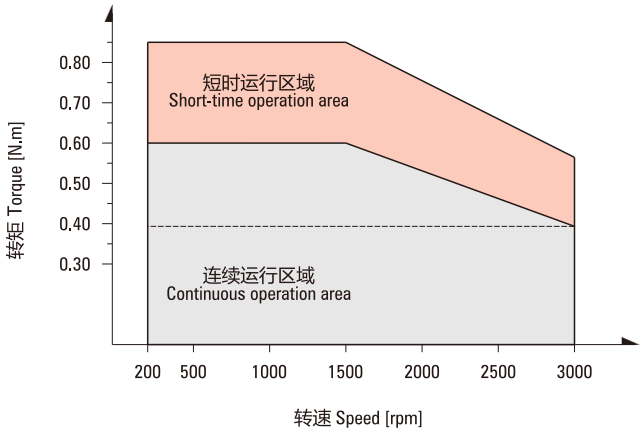

● 5IK120RGU-CF (220V/50Hz)
(ZD标准驱动器 ZD Standard Drive)

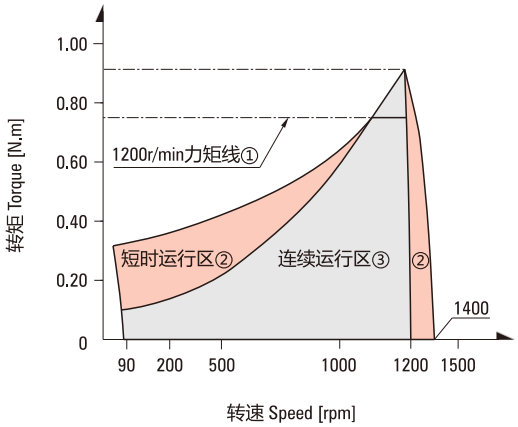

①1200r/min torque line ②Short-time operating area ③Continuous operation area

● **无刷、交流调速且连续运行性能一览表** Working performance table of brushless motor and ac speed adjustable motor

序号 Serial Number	Z5BLD120-220GU-25S					5IK120RGU-CF				
	力矩 Moment N.m	转速 Speed rpm	电流 Current A	效率 Efficiency %	温升 Temperature Rise K	力矩 Moment N.m	转速 Speed rpm	电流 Current A	效率 Efficiency %	温升 Temperature Rise K
1	0.595	200	0.485	26.5	≤50K	0.010	200	0.850	3.00	≤80K
2	0.595	500	0.671	47.5	≤50K	0.150	500	1.070	8.00	≤80K
3	0.595	1000	0.966	62.0	≤40K	0.500	1000	1.186	32.5	≤80K
4	0.595	1500	1.200	69.0	≤40K	0.915	1400	0.981	60.0	≤55K

环境温度-10ºC～+40ºC下使用 Ambient temperature -10ºC～+40ºC environment

薄型、大功率 Thin, High Power

无刷电动机的转子使用永磁体，因此实现了薄型和大功率；比如，与安装尺寸90的三相感应电动机相比总长缩短>75mm，输出功率达到1.3倍。若采用无刷电动机，有助于实现装置的小型化。

Brushless DC motors have a slim body and provide high power due to permanent magnets being used in the rotor. For example, the overall length is 75mm shorter and the output power is 1.3 times higher than that of three-phase induction motors with a frame size of 90mm. Using brushless DC motors can contribute to downsizing and space saving.

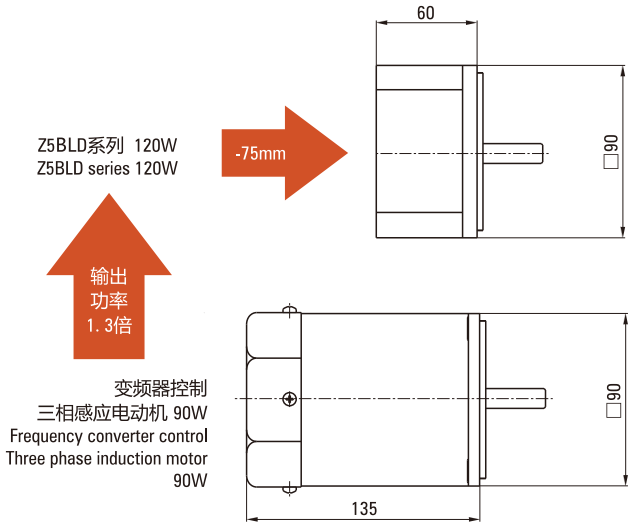

搭载保护功能，有助于保护设备系统的安全 Protection Function, Help To Protect The Safety Of The Equipment System

由于加载了过流、欠压、缺相等保护功能，因此可保证设备系统运行时的安全。

Due to the load of the overcurrent, undervoltage, open phase protection, for this reason can ensure the safety of equipment system.

电机的一般规格——转速 Motor Spec——Speed

减速比 Reduction Ratio / 电机轴转速 Motor Speed / 出轴转速 Output Shaft Speed	3	3.6	5	6	7.5	9	10	12.5	15	18	20	25
200～1500RPM	67～500	56～417	40～300	33～250	27～200	22～167	20～150	16～120	13～100	11～83	10～75	8～60
2000RPM	667	556	400	334	267	222	200	160	133	111	100	80
2500RPM	833	694	500	417	333	278	250	200	167	139	125	100
3000RPM	1000	833	600	500	400	333	300	240	200	167	150	120

减速比 Reduction Ratio / 电机轴转速 Motor Speed / 出轴转速 Output Shaft Speed	30	36	50	60	75	90	100	120	150	180	200	
200～1500RPM	7～50	6～42	4～30	3～25	3～20	2～17	2～15	2～12.5	1.5～10	1～8	1～7.5	
2000RPM	67	56	40	33	27	22	20	17	13	11	10	
2500RPM	83	69	50	42	33	28	25	21	17	14	13	
3000RPM	100	83	60	50	40	33	30	25	20	17	15	

电机的一般规格——产品种类 Motor Spec——Product Type

电动机 Motor	方形尺寸 Square Size	输出功率 Output Power	机型 Model	驱动器 Driver	电源电压 Voltage Supply
	60X60	15、25	标准型 Standard type IP40 或 or IP54		DC24～48 单相 Single phase 100～120V 单相 Single phase 220～240V
	70X70	30、40			
	80X80	40、60			
	90X90 (GN)	40、60			
	90X90 (GU)	60、90、120			
	104X104	200、400			
	120X120	750、1000			

电机的一般规格——基本性能 Motor Spec——Basic Performance

项目		电动机	驱动器
绝缘电阻（不得将电机与驱动连接状态下测试）		在常温常湿环境下连续运行后，以DC500V电阻表测试电动机线圈与外壳之间的测量值应在50MΩ以上	在常温常湿环境下连续运行后，电源端子与保护接地端子间、电源端子与输入/输出信号端之间的电阻值以DC500V电阻表测量达50MΩ以上
绝缘耐压（不得将电机与驱动连接状态下测试）		在常温常湿环境下连续运行后，线圈、外壳间以50Hz、AC1.5kv施加1分钟无异常，泄漏电流<10mA	在常温常湿环境下连续运行后，电源端子与保护接地端子间以50Hz、AC1.5Kv，电源端子与输入/输出信号端之间以50Hz、AC1.5Kv施加1分钟无异常
温度上升		在常温常湿环境下连续运行后，以热电偶法测量的线圈温度上升值在55°C以下、测量外壳表面温度上升值在40°C以下①	在常温常湿环境下连续运行后，以热电偶法测量的铝质散热板温度上升值在50°C以下
使用环境	环境温度	-10°C～+40°C（无结冰）	
	环境湿度	85%以下（无凝霜）	
	海拔高度	1000m以下	
	介质环境	无腐蚀性气体、尘埃；不可在含有放射性物质、磁场及真空等特殊环境中使用	
	振动	不可施加连续振动或过度冲击	
保存环境②	环境温度	-10°C～+40°C（无结冰）	
	环境湿度	85%以下（无凝霜）	
	海拔高度	1000m以下	
耐热等级		B级	/
保护等级		IP40 & IP54	IP20

①为了使电动机外壳表面温度能保持在90°C以下，需将电动机安装在以下尺寸的散热板（材质：铝）上；25W:115X115X厚度5、60W:135X135X厚度5、120W:165X165X厚度5、200W:200X200X厚度5。（单位：mm）

②保护环境也包括运输途中的短期值。

Project Iteam		Motor	Driver
Insulation resistance (No motor and drive connection state test)		50MΩ or more when 500VDC megger is applied between the windings and the case after continuous operation under normal ambient temperature and humidity	50MΩ or more when 500VDC megger is applied between the power supply terminal and the protective earth terminal, and between the power supply terminal and the I/O signal terminal after continuous operation under normal ambient temperature and humidity
Insulation resistance (No motor and drive connection state test)		Sufficient to withstand AC1.5kv at 50Hz applied between the windings and the case for 1 minute after continuous operation under normal ambient temperature and humidity	Sufficient to withstand AC1.5kv at 50Hz applied between the power supply terminal and the protective earth terminal and the I/O signal terminal for 1 minute after continuous operation under normal ambient temperature and humidity
Temperature rise		The temperature rise of windings is 55°C max, and that of the case surface is 40°C max, measured by the thermocouple method after rated continuous operation under normal ambient temperature and humidity	The temperature of the heat sink is 50°C max, measured by the thermocouple method after rated continuous operation under normal ambient temperature and humidity
Use environment	Ambient temperature	-10°C～+40°C (Non-freezing)	
	Ambient humidity	85% or less (No-condensing)	
	Altitude	1000m following	
	Medium environment	Non corrosive gas, dust; can not be used in a special environment containing radioactive substances, magnetic fields and vacuum, etc	
	Vibration	Not to exert a continuous vibration or excessive impact	
Save environment②	Ambient temperature	-10°C～+40°C (Non-freezing)	
	Ambient humidity	85% or less (No-condensing)	
	Altitude	1000m following	
Heat resistance grade		B stage	/
Protection level		IP40 & IP54	IP20

① In order to make the motor shell surface temperature can be maintained below 90°C, the motor installed in the following dimensions of the radiating plate (Material: aluminum); thickness of 25W: 115X115X5, the thickness of the 60W: 135X135X5, the thickness of the 120W: 165X165X5, the thickness of the 200W: 200X200X5. (Unit: mm)

② The storage condition applies to a short period such as a period during transportation.

型号阅读方法
PRODUCT CODE

电动机 Motor

Z	5	BLD	90	-	220	GN(L)	-	30S	-	M
①	②	③	④		⑤	⑥		⑦		⑧

①	公司名称 Comanpy	中大电机 ZD MOTOR					
②		型号尺寸 Model & Dimension					
	座机号 Code	2	3	4	5	6	7
	电机安装法兰 Mounting flange mm	□60	□70	□80	□90	□104	□120
	机壳尺寸 Case dimension	60*60	70*70	80*80	90*90	104*104	120*120
③	电机种类 Motor type	BLD: 永磁无刷电机 BLD: DC Brushless gear motor					
④	输出功率 (W) Output power (W)	(例e.g) 90: 90W					
⑤	电源电压 Voltage	(例e.g) 24: 24VDC (可选电压24V～48VDC, 单相100V～120VAC, 单相220V～240VAC, 50/60Hz) 24: 24VDC (Optional voltage 24V～48VDC, single phase 100V～120VAC, single phase 220V～240VAC, 50/60Hz)					
⑥	相对于方型减速箱 Relative to square type gear box: 齿轴形状 Motor shaft type	GN: GN型齿轮轴 GN type gear shaft GU: GU型齿轮轴 GU type gear shaft					
	相对于L型减速箱 L type gearbox: 齿轴形状 Shaft shape	GNL: GN型L系列齿轮轴 (主要为2&4系列) Type L GN series gear shaft (Mainly for 2&4 series) GUL: GU型L系列齿轮轴 (主要为5&6系列) Type L GU series gear shaft (Mainly for 5&6 series)					
	光电机出轴形状 Shape of the output shaft: A: 圆轴型 Circular shaft type	A1: 键槽型 Keyway type					
⑦	电机转速 Motor speed						
⑧	电机附加配件 M: 电磁刹车器 BM: 闭环反馈方式，一般指电机增加编码器 (包括简易型霍尔编码器) Motor parts M: Electromagnetic brake BM: Closed loop feedback mode, generally refers to the motor to increase the encoder (Including the simple holzer encoder)						

方型减速器 Square Shape Gearbox

5	GN	50	K
①	②	③	④

①	减速机安装尺寸 Gearhead frame size	2: 60mm 3: 70mm 4: 80mm 5: 90mm 6: 104mm 7: 120mm
②	类型 Gear type	GN: GN型齿轮 GN type gear GU: GU型齿轮轴 GU type gear
③	减速比 Gear ratio	(例e.g) 50: 减速比 50: Reduction ratio
④	轴承种类 Bearing type	K: 滚珠轴承 (对GU型方箱体标注为KB) K: Ball bearing (On the GU type square box marked as KB)

L型减速器 L Type Gearbox

5	GU	50	LC
①	②	③	④

①	减速机安装尺寸 Gearhead frame size	2: 60mm 3: 70mm 4: 80mm 5: 90mm 6: 104mm 7: 120mm
②	类型 Gear type	GN: GN型齿轮轴 (针对L系列2&4) Type GN gear shaft (For L series 2&4) GU: GU型齿轮轴 (针对L系列5&6) Type GU gear shaft (For L series 5&6)
③	减速比 Gear ratio	(例e.g) 50: 减速比 50: Reduction ratio
④	减速箱类型 Bearing type	LC: L型空心轴输出减速器 L type hollow shaft output reducer RC: 弧锥齿空心轴输出 Hollow shaft output of spiral bevel gear RT: 弧锥齿实心轴输出 Solid shaft output of spiral bevel gear

60系列永磁无刷齿轮减速电机
60 SERIES OF BRUSHLESS DC MOTOR

电机基本特性 Basic Characteristics Of Motor

● 25W (DC电源时适用于24VDC/36VDC/48VDC) 25W (DC Power Supply When Applied To 24VDC/36VDC/48VDC)

额定功率(连续) Rated power (Continuous)		W	25(15W/25W)		
额定转速 Rated speed		r/min	3000		
额定转矩 Rated torque		N.m	0.08		
瞬时最大转矩 Instantaneous maximum torque		N.m	0.12		
转子转动惯量 Rotor moment of inertia		$J:X10^{-4}kg.m^2$	0.042		
速度控制范围 Speed control range		RPM	200～3000		
速率变化率 Speed control range	对负载 On load		±1.0%以下: 条件0～额定转矩、额定转速、额定电压、常温 Below ±1%: condition 0～rated torque, rated speed, rated voltage, room temperature		
	对电压 On voltage		±1.0%以下: 条件额定电压±10%、额定转速、额定负载、常温 Below±1%: condition rated voltage ±10%, rated speed, rated load, room temperature		
	对温度 On temperature		±1.0%以下: 条件使用环境温度-10°C～+40°C额定转速、额定负载、额定电压 Below±1%: Conditions of ambient temperature -10°C～+40°C rated voltage, rated load and rated speed		
电源输入 Power input	额定电压 Rated voltage	V	单相Single phase 110V	单相Single phase 220V	24VDC(可选Optional 36VDC/48VDC)
	电压容许范围 Voltage tolerance range		±10%		
	频率 Frequency	Hz	50/60		/
	频率容许范围 Frequency tolerance range		±5%		/
	额定输入电流 Rated input current	A	1.0	0.6	1.7
	瞬时最大输入电流 Instantaneous maximum input current	A	2.0	1.2	2.6

圆轴型光电机 Circular Shaft Type Optical Motor

● Z2BLD25-□A-30S □—电压 Voltage 24/36/48/110/220

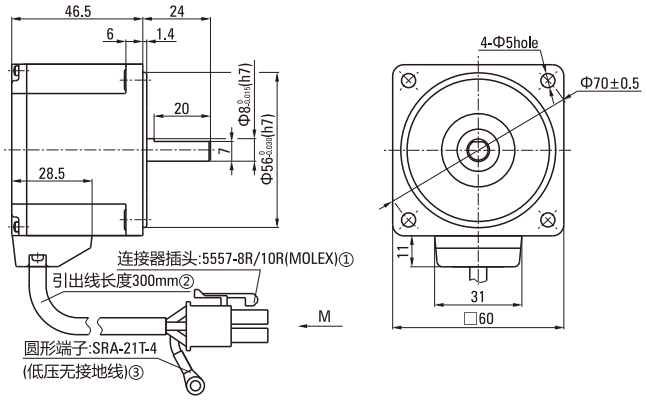

● Z2BLD25-220A-30S 曲线图 Diagram
(ZD标准驱动器 ZD Standard Drive)

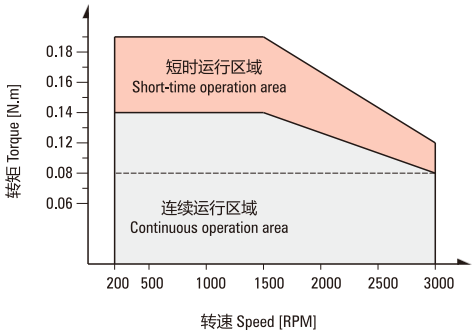

①Connector: 5557-8R/10R (MOLEX) ②The sheath length of lead line 300mm ③Round terminal: SRA-21T-4 (Low ground)

● **低压电机接线插孔对应信号说明**
Low Voltage Wrie Plughole Corresp-onding Signal Explanation

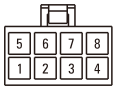

1	2	3	4	5	6	7	8
绿(粗)	黑(细)	蓝(细)	红(细)	黄(粗)	蓝(粗)	绿(细)	黄(细)
V	GND	Hw	Vcc+5V	U	W	Hv	Hu

● **高压电机接线插孔对应信号说明**
High Voltage Wrie Plughole Corresp-onding Signal Explanation

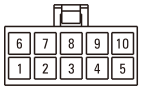

1	2	3	4	5	6	7	8	9	10
黄(细)	绿(细)	蓝(细)	金属丝网	黑(细)	蓝(粗)	黄(粗)	绿(粗)		红(细)
Hu	Hv	Hw		GND	W	U	V		Vcc+5V

25W

● **平行轴减速机** Parallel Shaft Speed Reducer

Z2BLD25-◘GN-30S/2GN□K ◘—电压 Voltage 24/36/48/110/220

□—速比数值 Velocity Ratio Value

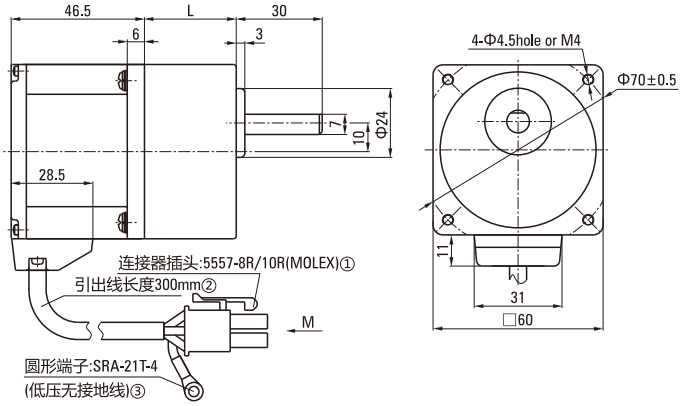

①Connector: 5557-8R/10R (MOLEX) ②The sheath length of lead line 300mm ③Round terminal: SRA-21T-4 (Low ground)

● **中间减速器** Decimal Gearhead

2GN□XK

□—速比数值, 一般为10 Velocity Ratio Value, Generally 10

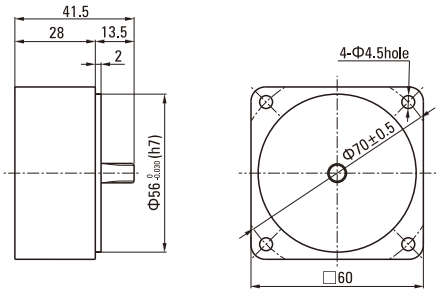

减速器型号 Gearhead Model	减速比 Gear Ratio	L尺寸 Dimension
2GN□K	3～18	32&41
	20～200	41

●减速器型号的□中为减速比的数值

Enter the gear ratio in the box (□) within the model name

● Z2BLD15-◘GN-30S/2GN□K**整机容许力矩（单位：N.m）** Z2BLD15-◘GN-30S/2GN□K Machine Allowable Torque (Unit: N.m)

型号 Model	减速比 Reduction Ratio / 电机轴转速 Motor Speed	3	3.6	5	6	7.5	9	10	12.5	15	18	20	25	30	36	50	60	75	90	100	120	150	180	200
Z2BLD15-◘GN	200～1500RPM	0.18	0.22	0.30	0.36	0.45	0.54	0.60	0.75	0.91	1.08	1.09	1.36	1.63	1.96	2.72	3.00	3.00	3.00	3.00	3.00	3.00	3.00	3.00
	2000RPM	0.15	0.18	0.26	0.31	0.38	0.45	0.51	0.64	0.77	0.92	0.92	1.15	1.38	2.30	2.50	3.00	3.00	3.00	3.00	3.00	3.00	3.00	3.00
	2500RPM	0.14	0.17	0.23	0.28	0.35	0.42	0.46	0.58	0.70	0.84	0.84	1.05	1.25	1.51	2.09	2.27	2.83	3.00	3.00	3.00	3.00	3.00	3.00
	3000RPM	0.12	0.14	0.19	0.23	0.29	0.35	0.39	0.48	0.58	0.70	0.70	0.87	1.05	1.25	1.74	1.88	2.35	2.82	3.00	3.00	3.00	3.00	3.00

● Z2BLD25-◘GN-30S/2GN□K**整机容许力矩（单位：N.m）** Z2BLD25-◘GN-30S/2GN□K Machine Allowable Torque (Unit: N.m)

型号 Model	减速比 Reduction Ratio / 电机轴转速 Motor Speed	3	3.6	5	6	7.5	9	10	12.5	15	18	20	25	30	36	50	60	75	90	100	120	150	180	200
Z2BLD25-◘GN	200～1500RPM	0.30	0.36	0.50	0.60	0.75	0.91	1.00	1.26	1.51	1.81	1.81	2.27	2.72	3.00	3.00	3.00	3.00	3.00	3.00	3.00	3.00	3.00	3.00
	2000RPM	0.26	0.31	0.43	0.51	0.64	0.77	0.85	1.06	1.28	1.53	1.53	1.92	2.30	2.76	3.00	3.00	3.00	3.00	3.00	3.00	3.00	3.00	3.00
	2500RPM	0.23	0.28	0.39	0.46	0.58	0.69	0.77	0.97	1.16	1.39	1.39	1.74	2.09	2.51	3.00	3.00	3.00	3.00	3.00	3.00	3.00	3.00	3.00
	3000RPM	0.19	0.23	0.32	0.39	0.48	0.58	0.64	0.81	0.97	1.16	1.16	1.45	1.74	2.09	2.90	3.00	3.00	3.00	3.00	3.00	3.00	3.00	3.00

注Note：表格中的▭（灰底部分）表示旋转方向与电机转向一致。The ▭ (gray) in the table indicates that the rotation direction is consistent with the motor.
(不同转速及速比下的力矩为ZD标准驱动器下测试所得。The torque under different speed and speed ratio is obtained under the ZD standard.)

● L**型减速机** L Type Speed Reducer

Z2BLD25-◘GNL-30S/2GN□LC ◘—电压 Voltage 24/36/48/110/220

□—速比数值 Velocity Ratio Value

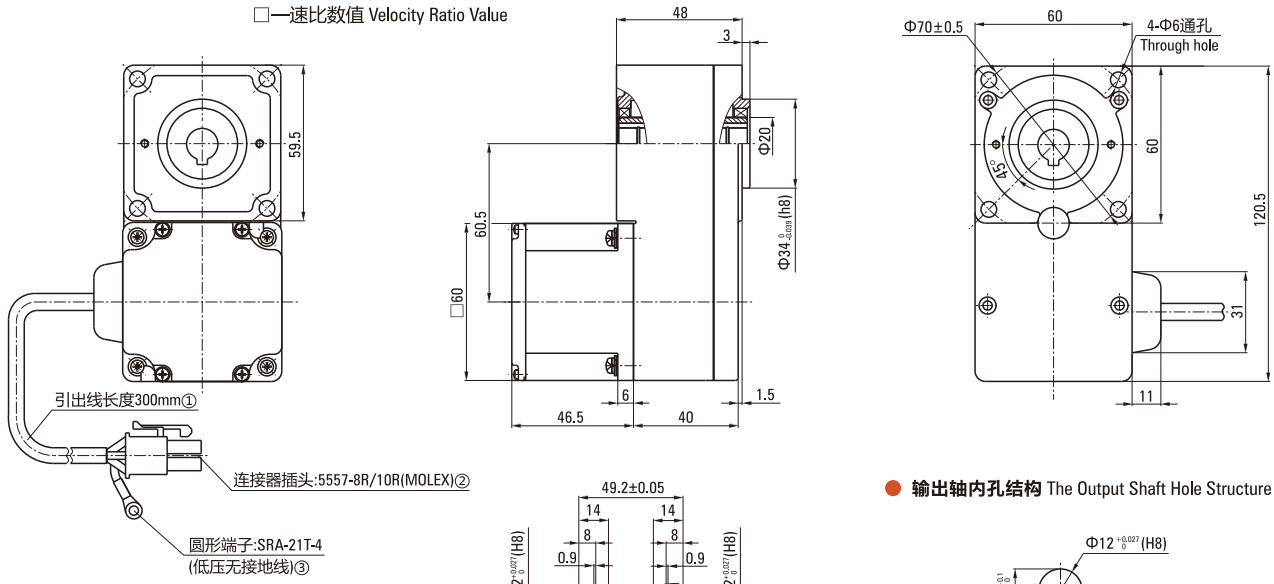

● **输出轴内孔结构** The Output Shaft Hole Structure

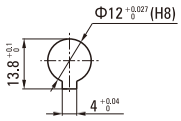

①Lead wire length 300mm ②Connector: 5557-8R/10R (MOLEX)
③Round terminal: SRA-21T-4 (Low ground)

● Z2BLD15-□GNL-30S/2GN□LC**整机容许力矩（单位：N.m）** Z2BLD15-□GNL-30S/2GN□LC Machine Allowable Torque (Unit: N.m)

减速比 Reduction Ratio / 电机轴转速 Motor Speed	5	10	15	20	30	50	100	200
200～1500RPM	0.27	0.54	0.82	1.09	1.63	2.72	5.44	10.9
2000RPM	0.23	0.46	0.69	0.92	1.38	2.30	4.60	9.20
2500RPM	0.21	0.42	0.63	0.84	1.25	2.09	4.18	8.37
3000RPM	0.17	0.35	0.52	0.70	1.05	1.74	3.49	6.97

注Note：表格中的所有速比旋转方向与电机转向相反。All gearbox output turn direction in form are opposite as motor turn direction.
(不同转速及速比下的力矩为ZD标准驱动器下测试所得。The torque under different speed and speed ratio is obtained under the ZD standard.)

● Z2BLD25-□GNL-30S/2GN□LC**整机容许力矩（单位：N.m）** Z2BLD25-□GNL-30S/2GN□LC Machine Allowable Torque (Unit: N.m)

减速比 Reduction Ratio / 电机轴转速 Motor Speed	5	10	15	20	30	50	100	200
200～1500RPM	0.50	1.00	1.51	2.01	2.72	4.53	9.06	16.40
2000RPM	0.43	0.85	1.28	1.70	2.30	3.83	7.67	13.90
2500RPM	0.39	0.77	1.16	1.55	2.09	3.49	6.97	12.60
3000RPM	0.29	0.58	0.87	1.16	1.74	2.90	5.81	11.62

注Note：表格中的所有速比旋转方向与电机转向相反。All gearbox output turn direction in form are opposite as motor turn direction.
(不同转速及速比下的力矩为ZD标准驱动器下测试所得。The torque under different speed and speed ratio is obtained under the ZD standard.)

70系列永磁无刷齿轮减速电机
70 SERIES OF BRUSHLESS DC MOTOR

电机基本特性 Basic Characteristics Of Motor

● 40W (DC电源时适用于24VDC/36VDC/48VDC) 40W (DC Power Supply When Applied To 24VDC/36VDC/48VDC)

额定功率(连续) Rated power (Continuous)		W	40(40W)		
额定转速 Rated speed		r/min	3000		
额定转矩 Rated torque		N.m	0.127		
瞬时最大转矩 Instantaneous maximum torque		N.m	0.191		
转子转动惯量 Rotor moment of inertia		$J:X10^{-4}kg.m^2$	0.082		
速度控制范围 Speed control range		RPM	200～3000		
速率变化率 Speed control range	对负载 On load		±1.0%以下: 条件0~额定转矩、额定转速、额定电压、常温 Below ±1%: condition 0~rated torque, rated speed, rated voltage, room temperature		
	对电压 On voltage		±1.0%以下: 条件额定电压±10%、额定转速、额定负载、常温 Below±1%: condition rated voltage ±10%, rated speed, rated load, room temperature		
	对温度 On temperature		±1.0%以下: 条件使用环境温度-10°C～+40°C额定转速、额定负载、额定电压 Below±1%: Conditions of ambient temperature -10°C～+40°C rated voltage, rated load and rated speed		
电源输入 Power input	额定电压 Rated voltage	V	24VDC(可选Optional 36VDC/48VDC)		
	电压容许范围 Voltage tolerance range		±10%		
	频率 Frequency	Hz	50/60		/
	频率容许范围 Frequency tolerance range		±5%		/
	额定输入电流 Rated input current	A	1.7	1.0	3.7
	瞬时最大输入电流 Instantaneous maximum input current	A	3.3	1.9	5.6

圆轴型光电机 Circular Shaft Type Optical Motor

● Z3BLD40-□A-30S □—电压 Voltage 24/36/48

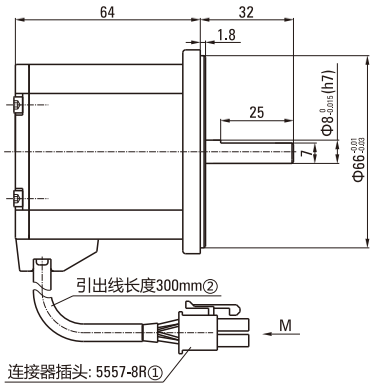

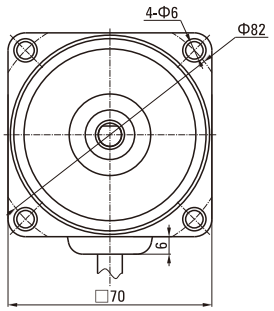

①Connector: 5557-8R ②The sheath length of lead line 300mm

● Z3BLD40-220A-30S 曲线图 Diagram
(ZD标准驱动器 ZD Standard Drive)

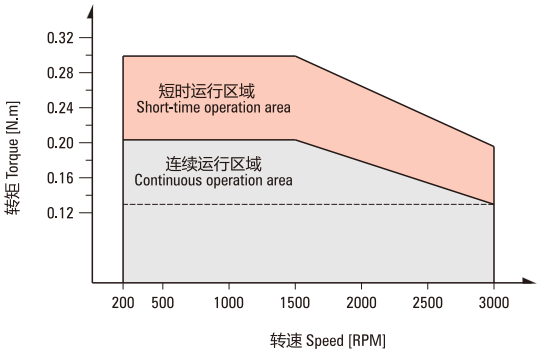

● **低压电机接线插孔对应信号说明**
Low Voltage Wrie Plughole Corresp-onding Signal Explanation

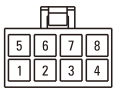

1	2	3	4	5	6	7	8
绿(粗)	黑(细)	蓝(细)	红(细)	黄(粗)	蓝(粗)	绿(细)	黄(细)
V	GND	Hw	Vcc+5V	U	W	Hv	Hu

● **高压电机接线插孔对应信号说明**
High Voltage Wrie Plughole Corresp-onding Signal Explanation

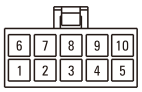

1	2	3	4	5	6	7	8	9	10
黄(细)	绿(细)	蓝(细)	金属丝网	黑(细)	蓝(粗)	黄(粗)	绿(粗)		红(细)
Hu	Hv	Hw		GND	W	U	V		Vcc+5V

40W

● **平行轴减速机** Parallel Shaft Speed Reducer

Z3BLD40-◘GN-30S/3GN□K ◘—电压 Voltage 24/36/48

□—速比数值 Velocity Ratio Value

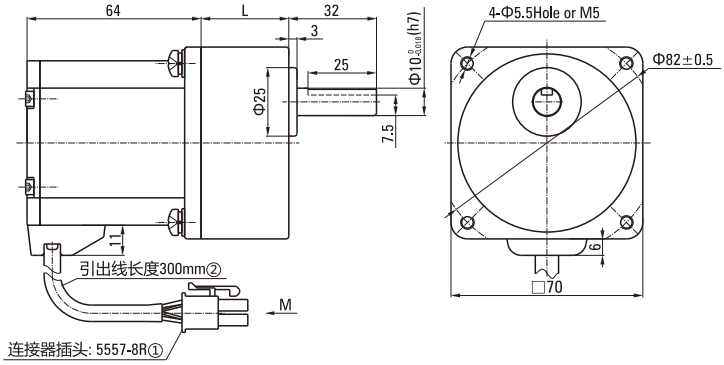

● **键・键槽** Key ・Keyway

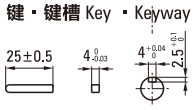

● **中间减速器** Decimal Gearhead

3GN□XK

□—速比数值, 一般为10 Velocity Ratio Value, Generally 10

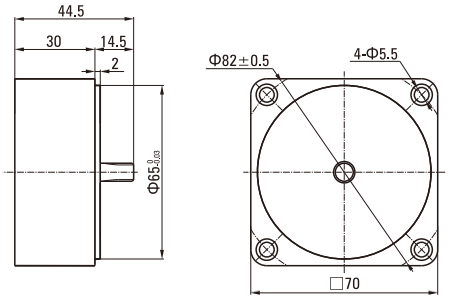

减速器型号 Gearhead Model	减速比 Gear Ratio	L尺寸 Dimension
3GN□K	3～18	32&42
	20～200	42

●减速器型号的□中为减速比的数值

Enter the gear ratio in the box (□) within the model name

● Z3BLD40-◘GN-30S/3GN□K**整机容许力矩（单位：N.m）** Z3BLD40-◘GN-30S/3GN□K Machine Allowable Torque (Unit: N.m)

型号 Model	减速比 Reduction Ratio / 电机轴转速 Motor Speed	3	3.6	5	6	7.5	9	10	12.5	15	18	20	25	30	36	50	60	75	90	100	120	150	180	200
Z3BLD40-◘GN	200～1500RPM	0.48	0.58	0.80	0.97	1.21	1.45	1.61	2.01	2.41	2.90	2.90	3.63	4.35	5.22	7.25	7.87	8.00	8.00	8.00	8.00	8.00	8.00	8.00
	2000RPM	0.41	0.49	0.68	0.82	1.02	1.23	1.36	1.70	2.04	2.45	2.45	3.07	3.68	4.42	6.13	6.66	8.00	8.00	8.00	8.00	8.00	8.00	8.00
	2500RPM	0.37	0.45	0.62	0.74	0.93	1.11	1.24	1.55	1.86	2.23	2.23	2.79	3.35	4.02	5.58	6.05	7.56	8.00	8.00	8.00	8.00	8.00	8.00
	3000RPM	0.31	0.37	0.52	0.62	0.77	0.93	1.03	1.29	1.55	1.86	1.86	2.32	2.79	3.35	4.65	5.01	6.26	7.52	8.00	8.00	8.00	8.00	8.00

● Z3BLD60-◘GN-30S/3GN□K**整机容许力矩（单位：N.m）** Z3BLD60-◘GN-30S/3GN□K Machine Allowable Torque (Unit: N.m)

型号 Model	减速比 Reduction Ratio / 电机轴转速 Motor Speed	3	3.6	5	6	7.5	9	10	12.5	15	18	20	25	30	36	50	60	75	90	100	120	150	180	200
Z3BLD60-◘GN	200～1500RPM	0.72	0.87	1.21	1.45	1.81	2.17	2.41	3.02	3.62	4.34	4.35	5.44	6.53	7.83	8.00	8.00	8.00	8.00	8.00	8.00	8.00	8.00	8.00
	2000RPM	0.61	0.74	1.02	1.23	1.53	1.84	2.04	2.55	3.06	3.68	3.68	4.60	5.52	6.63	8.00	8.00	8.00	8.00	8.00	8.00	8.00	8.00	8.00
	2500RPM	0.56	0.67	0.93	1.11	1.39	1.67	1.86	2.32	2.78	3.34	3.35	4.18	5.02	6.02	8.00	8.00	8.00	8.00	8.00	8.00	8.00	8.00	8.00
	3000RPM	0.46	0.56	0.77	0.93	1.16	1.39	1.55	1.93	2.32	2.78	2.79	3.49	4.18	5.02	6.97	7.52	8.00	8.00	8.00	8.00	8.00	8.00	8.00

注Note：表格中的▭（灰底部分）表示旋转方向与电机转向一致。The ▭ (gray) in the table indicates that the rotation direction is consistent with the motor.
(不同转速及速比下的力矩为ZD标准驱动器下测试所得。The torque under different speed and speed ratio is obtained under the ZD standard.)

● **L型减速机** L Type Speed Reducer

Z3BLD40-◘GNL-30S/3GN□LC ◘—电压 Voltage 24/36/48
□—速比数值 Velocity Ratio Value

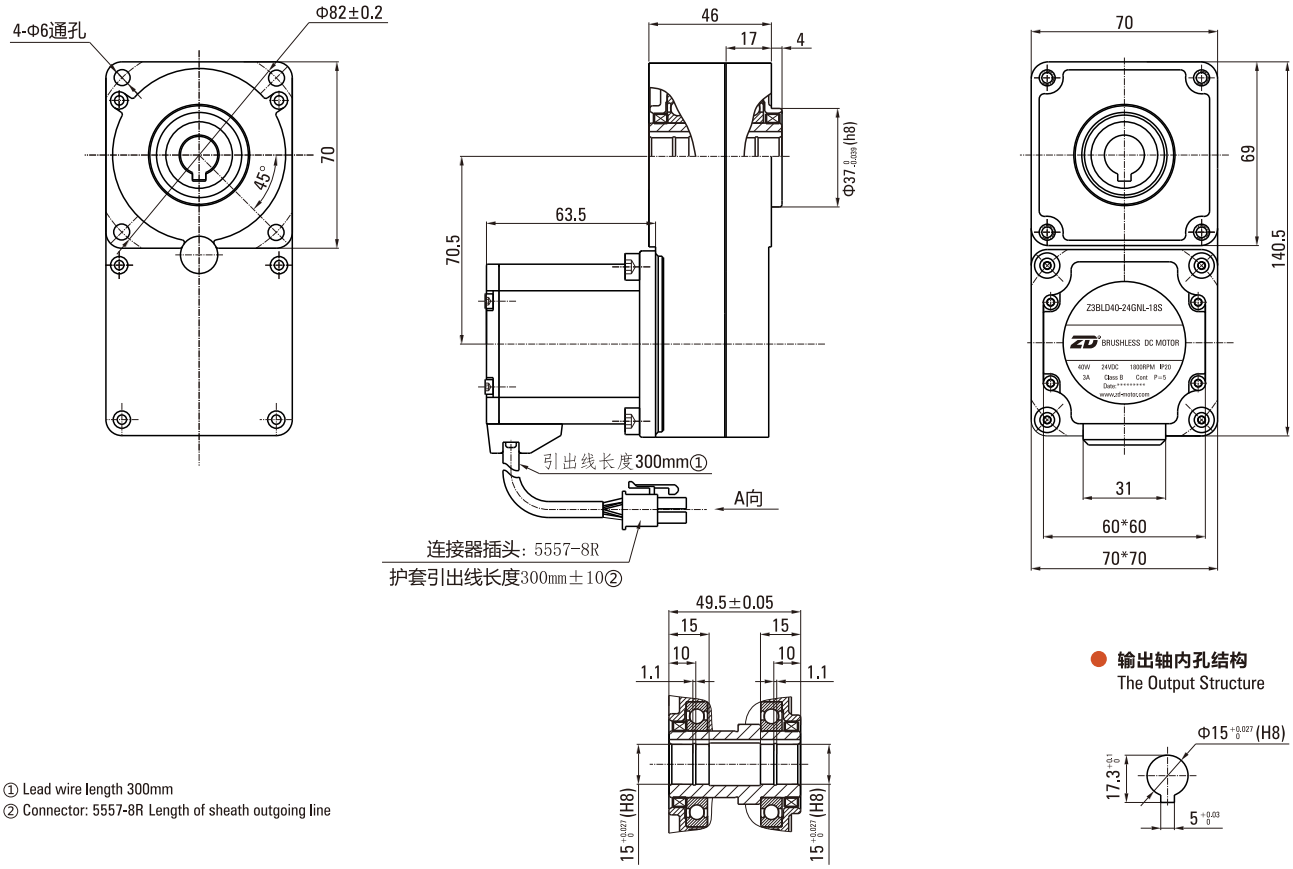

① Lead wire length 300mm
② Connector: 5557-8R Length of sheath outgoing line

● **输出轴内孔结构**
The Output Structure

● Z3BLD40-24GNL-18S/3GN□LC**整机容许力矩（单位：N.m)** Z3BLD40-24GNL-18S/3GN□LC Machine Allowable Torque (Unit: N.m)

减速比 Reduction Ratio / 电机轴转速 Motor Speed	5	10	15	20	30	50	60	90	100
1800RPM	0.77	1.55	2.32	3.10	4.65	7.75	9.30	13.94	15.49
3000RPM	0.46	0.93	1.39	1.86	2.79	4.65	5.58	8.37	9.30

注Note：表格中的所有速比旋转方向与电机转向相反。All gearbox output turn direction in form are opposite as motor turn direction.
(不同转速及速比下的力矩为ZD标准驱动器下测试所得。The torque under different speed and speed ratio is obtained under the ZD standard.)

● Z3BLD60-24GNL-18S/3GN□LC**整机容许力矩（单位：N.m)** Z3BLD60-24GNL-18S/3GN□LC Machine Allowable Torque (Unit: N.m)

减速比 Reduction Ratio / 电机轴转速 Motor Speed	5	10	15	20	30	50	60	90	100
1800RPM	1.16	2.32	3.49	4.65	6.97	11.62	13.94	20.91	23.24
3000RPM	0.70	1.39	2.09	2.79	4.18	6.97	8.37	12.55	13.94

注Note：表格中的所有速比旋转方向与电机转向相反。All gearbox output turn direction in form are opposite as motor turn direction.
(不同转速及速比下的力矩为ZD标准驱动器下测试所得。The torque under different speed and speed ratio is obtained under the ZD standard.)

80系列永磁无刷齿轮减速电机
80 SERIES OF BRUSHLESS DC MOTOR

电机基本特性 Basic Characteristics Of Motor

● 60W (DC电源时适用于24VDC/36VDC/48VDC) 60W (DC Power Supply When Applied To 24VDC/36VDC/48VDC)

额定功率(连续) Rated power (Continuous)		W	60(40W/60W)		
额定转速 Rated speed		r/min	3000		
额定转矩 Rated torque		N.m	0.191		
瞬时最大转矩 Instantaneous maximum torque		N.m	0.287		
转子转动惯量 Rotor moment of inertia		J:X10^{-4}kg.m^2	0.082		
速度控制范围 Speed control range		RPM	200～3000		
速率变化率 Speed control range	对负载 On load		±1.0%以下: 条件0～额定转矩、额定转速、额定电压、常温 Below ±1%: condition 0～rated torque, rated speed, rated voltage, room temperature		
	对电压 On voltage		±1.0%以下: 条件额定电压±10%、额定转速、额定负载、常温 Below±1%: condition rated voltage ±10%, rated speed, rated load, room temperature		
	对温度 On temperature		±1.0%以下: 条件使用环境温度-10ºC～+40ºC额定转速、额定负载、额定电压 Below±1%: Conditions of ambient temperature -10ºC～+40ºC rated voltage, rated load and rated speed		
电源输入 Power input	额定电压 Rated voltage	V	单相Single phase 110V	单相Single phase 220V	24VDC(可选Optional 36VDC/48VDC)
	电压容许范围 Voltage tolerance range		±10%		
	频率 Frequency	Hz	50/60		/
	频率容许范围 Frequency tolerance range		±5%		/
	额定输入电流 Rated input current	A	1.7	1.0	3.7
	瞬时最大输入电流 Instantaneous maximum input current	A	3.3	1.9	5.6

圆轴型光电机 Circular Shaft Type Optical Motor

● Z4BLD60-□A-30S □—电压 Voltage 24/36/48/110/220

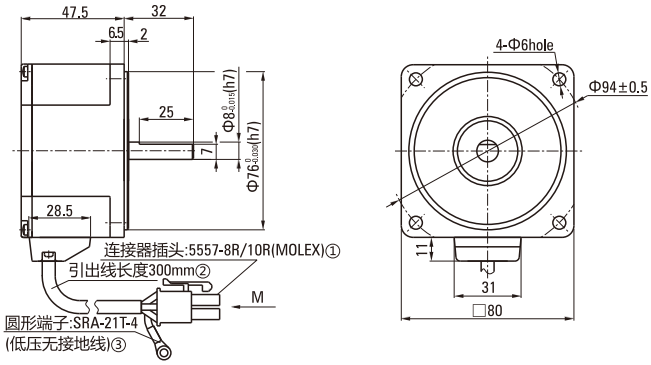

● Z4BLD60-220A-30S 曲线图 Diagram
(ZD标准驱动器 ZD Standard Drive)

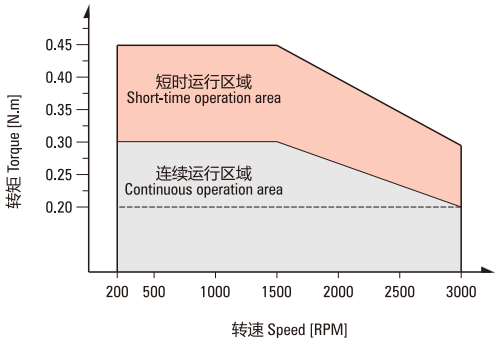

①Connector: 5557-8R/10R (MOLEX) ②The sheath length of lead line 300mm ③Round terminal: SRA-21T-4 (Low ground)

● **低压电机接线插孔对应信号说明**
Low Voltage Wrie Plughole Corresp-onding Signal Explanation

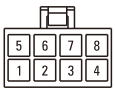

1	2	3	4	5	6	7	8
绿(粗)	黑(细)	蓝(细)	红(细)	黄(粗)	蓝(粗)	绿(细)	黄(细)
V	GND	Hw	Vcc+5V	U	W	Hv	Hu

● **高压电机接线插孔对应信号说明**
High Voltage Wrie Plughole Corresp-onding Signal Explanation

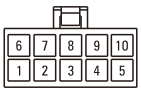

1	2	3	4	5	6	7	8	9	10
黄(细)	绿(细)	蓝(细)	金属丝网	黑(细)	蓝(粗)	黄(粗)	绿(粗)		红(细)
Hu	Hv	Hw		GND	W	U	V		Vcc+5V

60W

● **平行轴减速机** Parallel Shaft Speed Reducer

Z4BLD60-◘GN-30S/4GN□K ◘—电压 Voltage 24/36/48/110/220

□—速比数值 Velocity Ratio Value

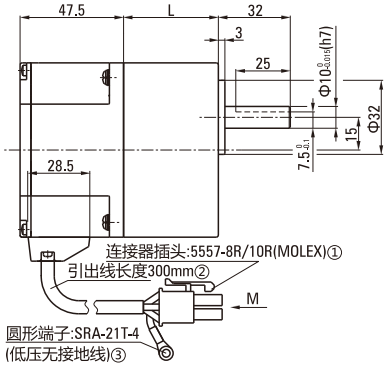

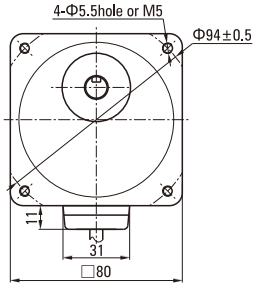

● **键・键槽** Key ・Keyway

①Connector: 5557-8R/10R (MOLEX) ②The sheath length of lead line 300mm ③Round terminal: SRA-21T-4 (Low ground)

● **中间减速器** Decimal Gearhead

4GN□XK

□—速比数值, 一般为10 Velocity Ratio Value, Generally 10

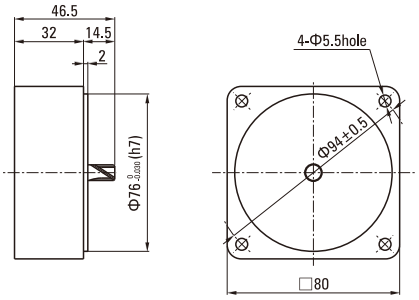

减速器型号 Gearhead Model	减速比 Gear Ratio	L尺寸 Dimension
4GN□K	3～18	32&43.5
	20～200	43.5

●减速器型号的□中为减速比的数值

Enter the gear ratio in the box (□) within the model name

● Z4BLD40-◘GN-30S/4GN□K**整机容许力矩（单位：N.m）** Z4BLD40-◘GN-30S/4GN□K Machine Allowable Torque (Unit: N.m)

型号 Model	减速比 Reduction Ratio / 电机轴转速 Motor Speed	3	3.6	5	6	7.5	9	10	12.5	15	18	20	25	30	36	50	60	75	90	100	120	150	180	200
Z4BLD40-◘GN	200～1500RPM	0.48	0.58	0.80	0.97	1.21	1.45	1.61	2.01	2.41	2.90	2.90	3.63	4.35	5.22	7.25	7.87	8.00	8.00	8.00	8.00	8.00	8.00	8.00
	2000RPM	0.41	0.49	0.68	0.82	1.02	1.23	1.36	1.70	2.04	2.45	2.45	3.07	3.68	4.42	6.13	6.66	8.00	8.00	8.00	8.00	8.00	8.00	8.00
	2500RPM	0.37	0.45	0.62	0.74	0.93	1.11	1.24	1.55	1.86	2.23	2.23	2.79	3.35	4.02	5.58	6.05	7.56	8.00	8.00	8.00	8.00	8.00	8.00
	3000RPM	0.31	0.37	0.52	0.62	0.77	0.93	1.03	1.29	1.55	1.86	1.86	2.32	2.79	3.35	4.65	5.01	6.26	7.52	8.00	8.00	8.00	8.00	8.00

● Z4BLD60-◘GN-30S/4GN□K**整机容许力矩（单位：N.m）** Z4BLD60-◘GN-30S/4GN□K Machine Allowable Torque (Unit: N.m)

型号 Model	减速比 Reduction Ratio / 电机轴转速 Motor Speed	3	3.6	5	6	7.5	9	10	12.5	15	18	20	25	30	36	50	60	75	90	100	120	150	180	200
Z4BLD60-◘GN	200～1500RPM	0.72	0.87	1.21	1.45	1.81	2.17	2.41	3.02	3.62	4.34	4.35	5.44	6.53	7.83	8.00	8.00	8.00	8.00	8.00	8.00	8.00	8.00	8.00
	2000RPM	0.61	0.74	1.02	1.23	1.53	1.84	2.04	2.55	3.06	3.68	3.68	4.60	5.52	6.63	8.00	8.00	8.00	8.00	8.00	8.00	8.00	8.00	8.00
	2500RPM	0.56	0.67	0.93	1.11	1.39	1.67	1.86	2.32	2.78	3.34	3.35	4.18	5.02	6.02	8.00	8.00	8.00	8.00	8.00	8.00	8.00	8.00	8.00
	3000RPM	0.46	0.56	0.77	0.93	1.16	1.39	1.55	1.93	2.32	2.78	2.79	3.49	4.18	5.02	6.97	7.52	8.00	8.00	8.00	8.00	8.00	8.00	8.00

注Note：表格中的▭（灰底部分）表示旋转方向与电机转向一致。The ▭ (gray) in the table indicates that the rotation direction is consistent with the motor.
(不同转速及速比下的力矩为ZD标准驱动器下测试所得。The torque under different speed and speed ratio is obtained under the ZD standard.)

● **L型减速机** L Type Speed Reducer

Z4BLD60-◘GNL-30S/4GN□LC ◘—电压 Voltage 24/36/48/110/220

□—速比数值 Velocity Ratio Value

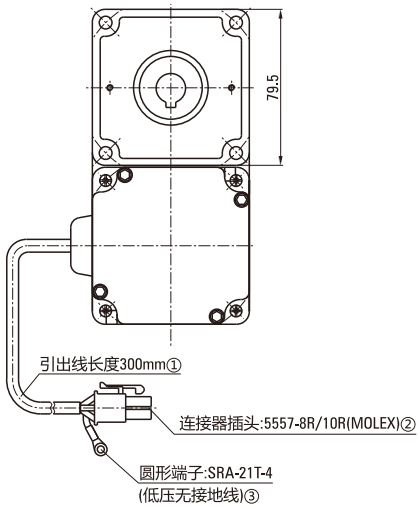

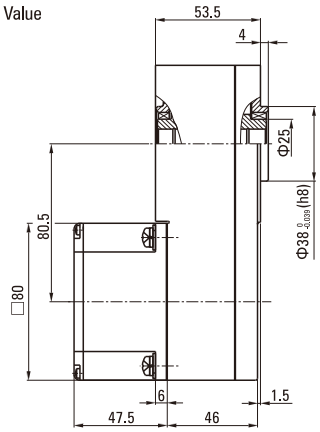

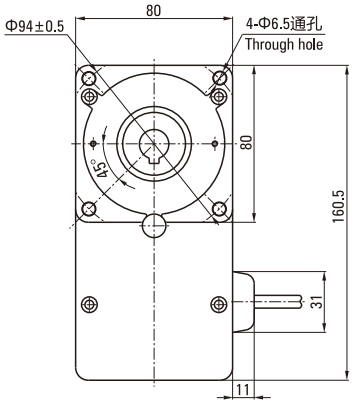

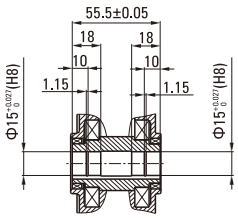

● **输出轴内孔结构** The Output Shaft Hole Structure

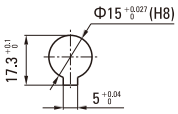

①Lead wire length 300mm ②Connector: 5557-8R/10R (MOLEX)
③Round terminal: SRA-21T-4 (Low ground)

● Z4BLD40-◘GNL-30S/4GN□LC**整机容许力矩（单位：N.m）** Z4BLD40-◘GNL-30S/4GN□LC Machine Allowable Torque (Unit: N.m)

减速比 Reduction Ratio / 电机轴转速 Motor Speed	5	10	15	20	30	50	100	200
200～1500RPM	0.73	1.45	2.18	2.90	4.35	7.25	14.50	29.00
2000RPM	0.61	1.23	1.84	2.45	3.68	6.13	12.30	24.50
2500RPM	0.56	1.12	1.67	2.23	3.35	5.58	11.20	22.30
3000RPM	0.46	0.93	1.39	1.86	2.79	4.65	9.30	18.59

● Z4BLD60-◘GNL-30S/4GN□LC**整机容许力矩（单位：N.m）** Z4BLD60-◘GNL-30S/4GN□LC Machine Allowable Torque (Unit: N.m)

减速比 Reduction Ratio / 电机轴转速 Motor Speed	5	10	15	20	30	50	100	200
200～1500RPM	1.21	2.41	3.62	4.83	6.53	10.9	21.80	39.30
2000RPM	1.02	2.04	3.06	4.08	5.52	9.20	18.40	33.30
2500RPM	0.93	1.86	2.78	3.71	5.02	8.37	16.70	30.30
3000RPM	0.70	1.39	2.09	2.79	4.18	6.97	13.94	27.89

注Note：表格中的所有速比旋转方向与电机转向相反。All gearbox output turn direction in form are opposite as motor turn direction.
(不同转速及速比下的力矩为ZD标准驱动器下测试所得。The torque under different speed and speed ratio is obtained under the ZD standard.)

● **弧锥直角减速电机** Arc Cone Right Angle Speed Reducer Motor

Z4BLD60-◘GN-30S/4GN□RC ◘—电压 Voltage 24/36/48/110/220
□—速比数值 Velocity Ratio Value

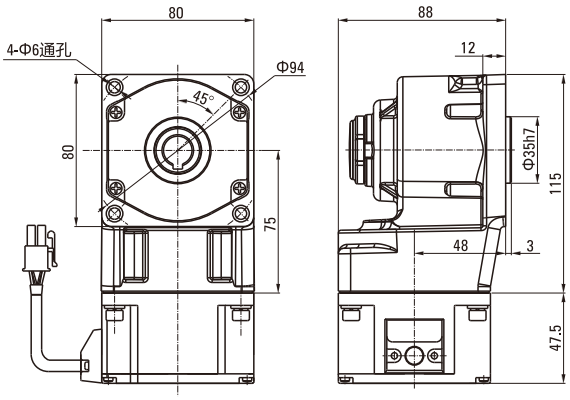

输出轴结构

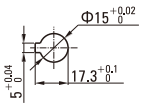

Z4BLD60-◘GN-30S/4GN□RT ◘—电压 Voltage 24/36/48/110/220
□—速比数值 Velocity Ratio Value

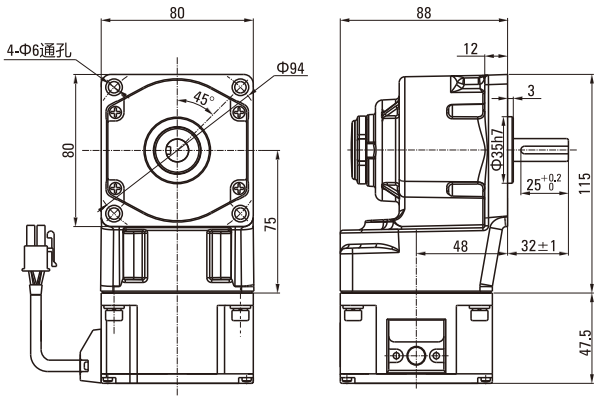

输出轴结构

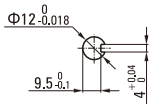

● Z4BLD40-◘GN-30S/4GN□RC/RT**整机容许力矩（单位：N.m）** Z4BLD40-◘GN-30S/4GN□RC/RT Machine Allowable Torque (Unit: N.m)

型号 Model	减速比 Reduction Ratio / 电机轴转速 Motor Speed	7.5	9	10	12.5	15	18	20	25	30	36	50	60	75	90	100	120	150	180
Z4BLD40-◘GN	200～1500RPM	1.21	1.45	1.61	2.01	2.41	2.90	2.90	3.63	4.35	5.22	7.25	7.87	8.00	8.00	8.00	8.00	8.00	8.00
	2000RPM	1.02	1.23	1.36	1.70	2.04	2.45	2.45	3.07	3.68	4.42	6.13	6.66	8.00	8.00	8.00	8.00	8.00	8.00
	2500RPM	0.93	1.11	1.24	1.55	1.86	2.23	2.23	2.79	3.35	4.02	5.58	6.05	7.56	8.00	8.00	8.00	8.00	8.00
	3000RPM	0.63	0.76	0.84	1.05	1.26	1.51	1.68	2.10	2.52	3.03	4.20	5.58	6.97	8.00	8.00	8.00	8.00	8.00

● Z4BLD60-◘GN-30S/4GN□RC/RT**整机容许力矩（单位：N.m）** Z4BLD60-◘GN-30S/4GN□RC/RT Machine Allowable Torque (Unit: N.m)

型号 Model	减速比 Reduction Ratio / 电机轴转速 Motor Speed	7.5	9	10	12.5	15	18	20	25	30	36	50	60	75	90	100	120	150	180
Z4BLD60-◘GN	200～1500RPM	1.81	2.17	2.41	3.02	3.62	4.34	4.35	5.44	6.53	7.83	8.00	8.00	8.00	8.00	8.00	8.00	8.00	8.00
	2000RPM	1.53	1.84	2.04	2.55	3.06	3.68	3.68	4.60	5.52	6.63	8.00	8.00	8.00	8.00	8.00	8.00	8.00	8.00
	2500RPM	1.39	1.67	1.86	2.32	2.78	3.34	3.35	4.18	5.02	6.02	8.00	8.00	8.00	8.00	8.00	8.00	8.00	8.00
	3000RPM	0.95	1.13	1.26	1.58	1.89	2.27	2.52	3.15	3.78	4.54	6.30	8.00	8.00	8.00	8.00	8.00	8.00	8.00

注Note：表格中的▭（灰底部分）表示旋转方向与电机转向一致。The ▭ (gray) in the table indicates that the rotation direction is consistent with the motor.
(不同转速及速比下的力矩为ZD标准驱动器下测试所得。The torque under different speed and speed ratio is obtained under the ZD standard.)

90系列永磁无刷齿轮减速电机（GN型）
90 SERIES OF BRUSHLESS DC MOTOR (GN TYPE)

电机基本特性 Basic Characteristics Of Motor

● 60W (DC电源时适用于24VDC/36VDC/48VDC) 60W (DC Power Supply When Applied To 24VDC/36VDC/48VDC)

额定功率(连续) Rated power (Continuous)		W	60(40W/60W)		
额定转速 Rated speed		r/min	3000		
额定转矩 Rated torque		N.m	0.191		
瞬时最大转矩 Instantaneous maximum torque		N.m	0.287		
转子转动惯量 Rotor moment of inertia		J:X10^{-4}kg.m^2	0.082		
速度控制范围 Speed control range		RPM	200～3000		
速率变化率 Speed control range	对负载 On load		±1.0%以下: 条件0~额定转矩、额定转速、额定电压、常温 Below ±1%: condition 0~rated torque, rated speed, rated voltage, room temperature		
	对电压 On voltage		±1.0%以下: 条件额定电压±10%、额定转速、额定负载、常温 Below±1%: condition rated voltage ±10%, rated speed, rated load, room temperature		
	对温度 On temperature		±1.0%以下: 条件使用环境温度-10°C～+40°C额定转速、额定负载、额定电压 Below±1%: Conditions of ambient temperature -10°C～+40°C rated voltage, rated load and rated speed		
电源输入 Power input	额定电压 Rated voltage	V	单相Single phase 110V	单相Single phase 220V	24VDC(可选Optional 36VDC/48VDC)
	电压容许范围 Voltage tolerance range		±10%		
	频率 Frequency	Hz	50/60		/
	频率容许范围 Frequency tolerance range		±5%		/
	额定输入电流 Rated input current	A	1.7	1.0	3.7
	瞬时最大输入电流 Instantaneous maximum input current	A	3.3	1.9	5.6

圆轴型光电机 Circular Shaft Type Optical Motor

● Z5BLD60-□A-30S □—电压 Voltage 24/36/48/110/220

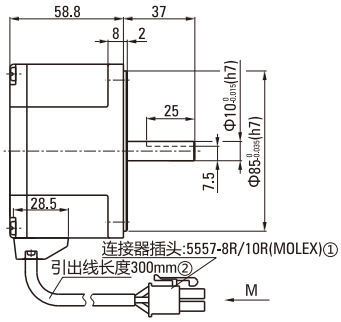

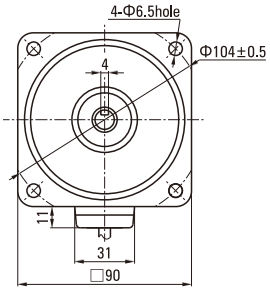

● Z5BLD60-220A-30S 曲线图 Diagram
(ZD标准驱动器 ZD Standard Drive)

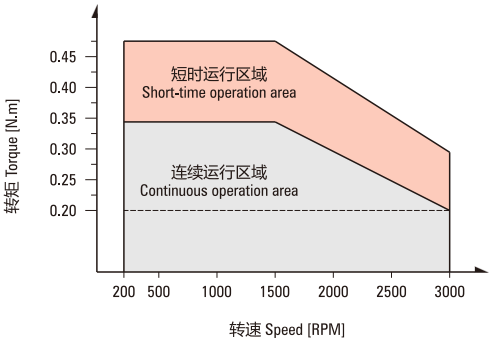

①Connector: 5557-8R/10R (MOLEX) ②Lead wire length 300mm

● **低压电机接线插孔对应信号说明**
Low Voltage Wrie Plughole Corresp-onding Signal Explanation

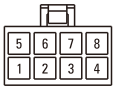

1	2	3	4	5	6	7	8
绿(粗)	黑(细)	蓝(细)	红(细)	黄(粗)	蓝(粗)	绿(细)	黄(细)
V	GND	Hw	Vcc+5V	U	W	Hv	Hu

● **高压电机接线插孔对应信号说明**
High Voltage Wrie Plughole Corresp-onding Signal Explanation

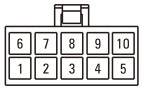

1	2	3	4	5	6	7	8	9	10
黄(细)	绿(细)	蓝(细)	金属丝网	黑(细)	蓝(粗)	黄(粗)	绿(粗)		红(细)
Hu	Hv	Hw		GND	W	U	V		Vcc+5V

60W

● **平行轴减速机** Parallel Shaft Speed Reducer

Z5BLD60-◘GN-30S/5GN□K ◘—电压 Voltage 24/36/48/110/220

□—速比数值 Velocity Ratio Value

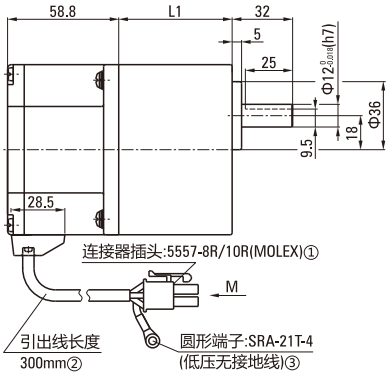

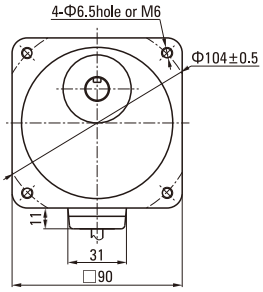

● **键・键槽** Key ・Keyway

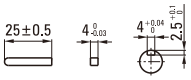

①Connector: 5557-8R/10R (MOLEX) ②The sheath length of lead line 300mm ③Round terminal: SRA-21T-4 (Low ground)

● **中间减速器** Decimal Gearhead

5GN□XK

□—速比数值, 一般为10 Velocity Ratio Value, Generally 10

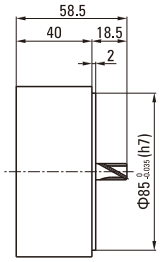

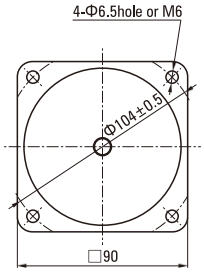

减速器型号 Gearhead Model	减速比 Gear Ratio	L尺寸 Dimension
5GN□K	3～18	42&60
	20～200	60

●减速器型号的□中为减速比的数值

Enter the gear ratio in the box (□) within the model name

● Z5BLD40-◘GN-30S/5GN□K**整机容许力矩（单位：N.m）** Z5BLD40-◘GN-30S/5GN□K Machine Allowable Torque (Unit: N.m)

型号 Model	减速比 Reduction Ratio / 电机轴转速 Motor Speed	3	3.6	5	6	7.5	9	10	12.5	15	18	20	25	30	36	50	60	75	90	100	120	150	180	200
Z5BLD40-◘GN	200～1500RPM	0.48	0.58	0.80	0.97	1.21	1.45	1.61	2.01	2.41	2.90	2.90	3.63	4.35	5.22	7.25	7.87	9.83	10.0	10.0	10.0	10.0	10.0	10.0
	2000RPM	0.41	0.49	0.68	0.82	1.02	1.23	1.36	1.70	2.04	2.45	2.45	3.07	3.68	4.42	6.13	6.66	8.32	9.98	10.0	10.0	10.0	10.0	10.0
	2500RPM	0.37	0.45	0.62	0.74	0.93	1.11	1.24	1.55	1.86	2.23	2.23	2.79	3.35	4.02	5.58	6.05	7.56	9.08	10.0	10.0	10.0	10.0	10.0
	3000RPM	0.31	0.37	0.52	0.62	0.77	0.93	1.03	1.29	1.55	1.86	1.86	2.32	2.79	3.35	4.65	5.01	6.26	7.52	8.35	10.0	10.0	10.0	10.0

● Z5BLD60-◘GN-30S/5GN□K**整机容许力矩（单位：N.m）** Z5BLD60-◘GN-30S/5GN□K Machine Allowable Torque (Unit: N.m)

型号 Model	减速比 Reduction Ratio / 电机轴转速 Motor Speed	3	3.6	5	6	7.5	9	10	12.5	15	18	20	25	30	36	50	60	75	90	100	120	150	180	200
Z5BLD60-◘GN	200～1500RPM	0.72	0.87	1.21	1.45	1.81	2.17	2.41	3.02	3.62	4.34	4.35	5.44	6.53	7.83	9.83	10.0	10.0	10.0	10.0	10.0	10.0	10.0	10.0
	2000RPM	0.61	0.74	1.02	1.23	1.53	1.84	2.04	2.55	3.06	3.68	3.68	4.60	5.52	6.63	8.32	9.98	10.0	10.0	10.0	10.0	10.0	10.0	10.0
	2500RPM	0.56	0.67	0.93	1.11	1.39	1.67	1.86	2.32	2.78	3.34	3.35	4.18	5.02	6.02	7.56	9.08	10.0	10.0	10.0	10.0	10.0	10.0	10.0
	3000RPM	0.46	0.56	0.77	0.93	1.16	1.39	1.55	1.93	2.32	2.78	2.79	3.49	4.18	5.02	6.97	7.52	9.40	10.0	10.0	10.0	10.0	10.0	10.0

注Note：表格中的▭（灰底部分）表示旋转方向与电机转向一致。The ▭ (gray) in the table indicates that the rotation direction is consistent with the motor.
(不同转速及速比下的力矩为ZD标准驱动器下测试所得。The torque under different speed and speed ratio is obtained under the ZD standard.)

90系列永磁无刷齿轮减速电机（GU型）
90 SERIES OF BRUSHLESS DC MOTOR (GU TYPE)

电机基本特性 Basic Characteristics Of Motor

● 120W (DC电源时适用于24VDC/36VDC/48VDC) 120W (DC Power Supply When Applied To 24VDC/36VDC/48VDC)

额定功率(连续) Rated power (Continuous)		W	120(60W/90W/120W)		
额定转速 Rated speed		r/min	3000		
额定转矩 Rated torque		N.m	0.382		
瞬时最大转矩 Instantaneous maximum torque		N.m	0.573		
转子转动惯量 Rotor moment of inertia		J:X10^{-4}kg.m^2	0.250		
速度控制范围 Speed control range		RPM	200～3000		
速率变化率 Speed control range	对负载 On load		±1.0%以下: 条件0~额定转矩、额定转速、额定电压、常温 Below ±1%: condition 0~rated torque, rated speed, rated voltage, room temperature		
	对电压 On voltage		±1.0%以下: 条件额定电压±10%、额定转速、额定负载、常温 Below±1%: condition rated voltage ±10%, rated speed, rated load, room temperature		
	对温度 On temperature		±1.0%以下: 条件使用环境温度-10ºC～+40ºC额定转速、额定负载、额定电压 Below±1%: Conditions of ambient temperature -10ºC～+40ºC rated voltage, rated load and rated speed		
电源输入 Power input	额定电压 Rated voltage	V	单相Single phase 110V	单相Single phase 220V	24VDC(可选Optional 36VDC/48VDC)
	电压容许范围 Voltage tolerance range		±10%		
	频率 Frequency	Hz	50/60		/
	频率容许范围 Frequency tolerance range		±5%		/
	额定输入电流 Rated input current	A	3.5	2.0	6.8
	瞬时最大输入电流 Instantaneous maximum input current	A	7.0	4.5	13.0

圆轴型光电机 Circular Shaft Type Optical Motor

● Z5BLD120-□A-30S □—电压 Voltage 24/36/48/110/220

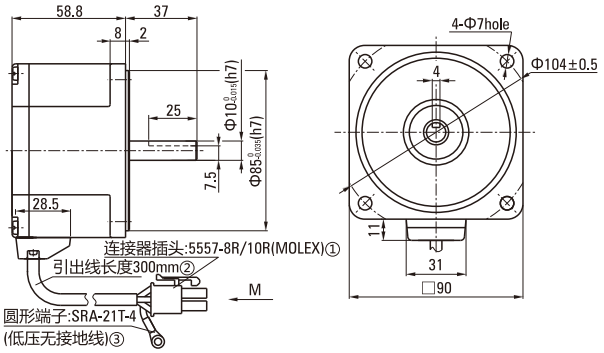

● Z5BLD120-220A-30S 曲线图 Diagram
(ZD标准驱动器 ZD Standard Drive)

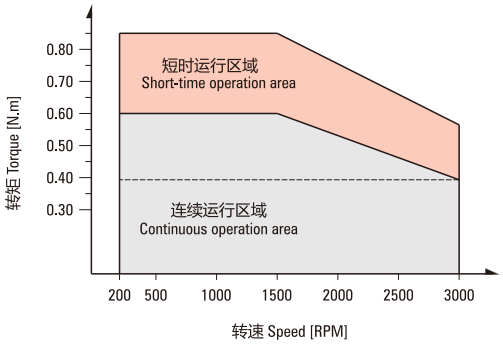

①Connector: 5557-8R/10R (MOLEX) ②Lead wire length 300mm ③Round terminal: SRA-21T-4 (Low ground)

● **低压电机接线插孔对应信号说明**
Low Voltage Wrie Plughole Corresp-onding Signal Explanation

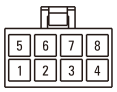

1	2	3	4	5	6	7	8
绿(粗)	黑(细)	蓝(细)	红(细)	黄(粗)	蓝(粗)	绿(细)	黄(细)
V	GND	Hw	Vcc+5V	U	W	Hv	Hu

● **高压电机接线插孔对应信号说明**
High Voltage Wrie Plughole Corresp-onding Signal Explanation

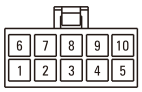

1	2	3	4	5	6	7	8	9	10
黄(细)	绿(细)	蓝(细)	金属丝网	黑(细)	蓝(粗)	黄(粗)	绿(粗)		红(细)
Hu	Hv	Hw		GND	W	U	V		Vcc+5V

120W

● **平行轴减速机** Parallel Shaft Speed Reducer

Z5BLD120-◘GU-30S/5GU□KB ◘—电压 Voltage 24/36/48/110/220

□—速比数值 Velocity Ratio Value

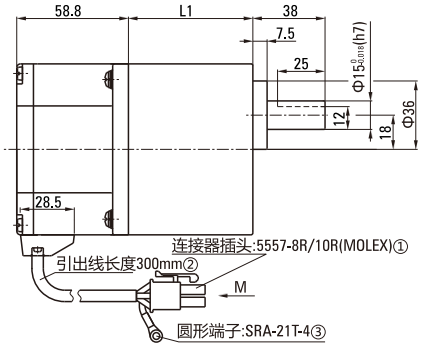

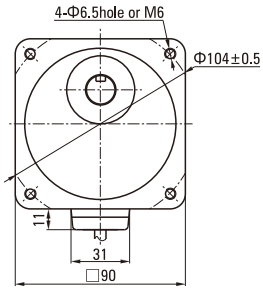

● **键・键槽** Key ・Keyway

①Connector: 5557-8R/10R (MOLEX) ②The sheath length of lead line 300mm ③Round terminal: SRA-21T-4

● **中间减速器** Decimal Gearhead

5GU□XK

□—速比数值, 一般为10 Velocity Ratio Value, Generally 10

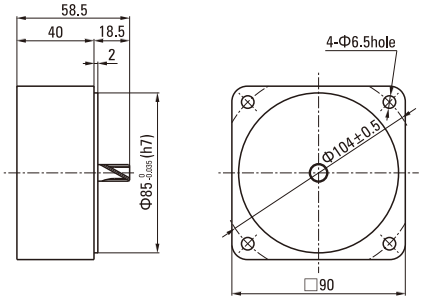

减速器型号 Gearhead Model	减速比 Gear Ratio	L尺寸 Dimension
5GU□K	3～200	65.5

●减速器型号的□中为减速比的数值

Enter the gear ratio in the box (□) within the model name

● Z5BLD60-◘GU-30S/5GU□K**整机容许力矩（单位：N.m）** Z5BLD60-◘GU-30S/5GU□K Machine Allowable Torque (Unit: N.m)

型号 Model	减速比 Reduction Ratio / 电机轴转速 Motor Speed	3	3.6	5	6	7.5	9	10	12.5	15	18	20	25	30	36	50	60	75	90	100	120	150	180	200
Z5BLD60-◘GU	200～1500RPM	0.72	0.87	1.21	1.45	1.81	2.17	2.41	3.02	3.62	4.34	4.35	5.44	6.53	7.83	9.83	10.0	10.0	10.0	10.0	10.0	10.0	10.0	10.0
	2000RPM	0.61	0.74	1.02	1.23	1.53	1.84	2.04	2.55	3.06	3.68	3.68	4.60	5.52	6.63	8.32	9.98	10.0	10.0	10.0	10.0	10.0	10.0	10.0
	2500RPM	0.56	0.67	0.93	1.11	1.39	1.67	1.86	2.32	2.78	3.34	3.35	4.18	5.02	6.02	7.56	9.08	10.0	10.0	10.0	10.0	10.0	10.0	10.0
	3000RPM	0.46	0.56	0.77	0.93	1.16	1.39	1.55	1.93	2.32	2.78	2.79	3.49	4.18	5.02	6.97	7.52	9.40	10.0	10.0	10.0	10.0	10.0	10.0

● Z5BLD90-◘GU-30S/5GU□K**整机容许力矩（单位：N.m）** Z5BLD90-◘GU-30S/5GU□K Machine Allowable Torque (Unit: N.m)

型号 Model	减速比 Reduction Ratio / 电机轴转速 Motor Speed	3	3.6	5	6	7.5	9	10	12.5	15	18	20	25	30	36	50	60	75	90	100	120	150	180	200
Z5BLD90-◘GU	200～1500RPM	1.09	1.30	1.81	2.18	2.72	3.26	3.62	4.53	5.43	6.52	6.53	8.16	9.79	11.8	14.7	17.7	20.0	20.0	20.0	20.0	20.0	20.0	20.0
	2000RPM	0.92	1.10	1.53	1.84	2.30	2.76	3.06	3.83	4.59	5.51	5.52	6.90	8.28	9.94	12.5	15.0	18.7	20.0	20.0	20.0	20.0	20.0	20.0
	2500RPM	0.84	1.00	1.39	1.67	2.09	2.51	2.78	3.48	4.18	5.01	5.02	6.27	7.53	9.04	11.3	13.6	17.0	20.0	20.0	20.0	20.0	20.0	20.0
	3000RPM	0.70	0.84	1.16	1.39	1.74	2.09	2.32	2.90	3.48	4.18	4.18	5.23	6.27	7.53	10.46	11.28	14.1	16.91	18.79	20.0	20.0	20.0	20.0

● Z5BLD120-◘GU-30S/5GU□KB**整机容许力矩（单位：N.m）** Z5BLD120◘ GU-30S/5GU□KB Machine Allowable Torque (Unit: N.m)

型号 Model	减速比 Reduction Ratio / 电机轴转速 Motor Speed	3	3.6	5	6	7.5	9	10	12.5	15	18	20	25	30	36	50	60	75	90	100	120	150	180	200
Z5BLD120-◘GU	200～1500RPM	1.45	1.74	2.41	2.90	3.62	4.34	4.35	5.44	6.53	7.83	7.87	9.83	11.8	14.2	19.7	20.0	20.0	20.0	20.0	20.0	20.0	20.0	20.0
	2000RPM	1.23	1.47	2.04	2.45	3.06	3.68	3.68	4.60	5.52	6.63	6.66	8.32	9.98	12.0	16.6	20.0	20.0	20.0	20.0	20.0	20.0	20.0	20.0
	2500RPM	1.11	1.34	1.86	2.23	2.78	3.34	3.35	4.18	5.02	6.02	6.05	7.56	9.08	10.9	15.1	18.2	20.0	20.0	20.0	20.0	20.0	20.0	20.0
	3000RPM	0.93	1.11	1.55	1.86	2.32	2.78	3.09	3.87	4.64	5.57	5.58	6.97	8.37	10.04	13.94	15.04	18.79	20.0	20.0	20.0	20.0	20.0	20.0

注Note：表格中的▭（灰底部分）表示旋转方向与电机转向一致。The ▭ (gray) in the table indicates that the rotation direction is consistent with the motor.
(不同转速及速比下的力矩为ZD标准驱动器下测试所得。The torque under different speed and speed ratio is obtained under the ZD standard.)

● **L型减速机** L Type Speed Reducer

Z5BLD120-◘GUL-30S/5GU□LC ◘—电压 Voltage 24/36/48/110/220
□—速比数值 Velocity Ratio Value

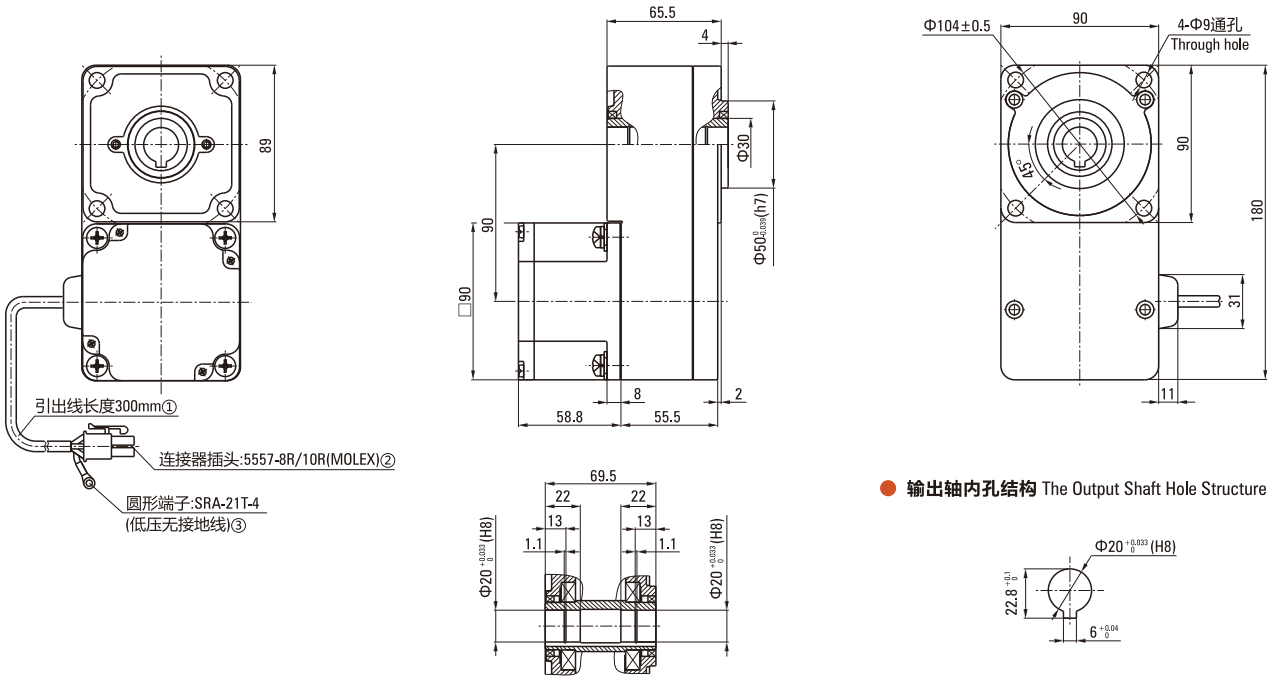

● **输出轴内孔结构** The Output Shaft Hole Structure

①Lead wire length 300mm ②Connector: 5557-8R/10R (MOLEX) ③Round terminal: SRA-21T-4 (Low ground)

● Z5BLD60-◘GUL-30S/5GU□LC**整机容许力矩（单位：N.m）** Z5BLD60-◘GUL-30S/5GU□LC Machine Allowable Torque (Unit: N.m)

减速比 Reduction Ratio / 电机轴转速 Motor Speed	5	10	15	20	30	50	100	200
200～1500RPM	1.09	2.18	3.26	4.35	6.53	10.9	21.8	43.5
2000RPM	0.92	1.84	2.76	3.68	5.52	9.20	18.4	36.8
2500RPM	0.84	1.67	2.51	3.35	5.02	8.37	16.7	33.5
3000RPM	0.70	1.39	2.09	2.79	4.18	6.97	13.94	27.89

● Z5BLD90-◘GUL-30S/5GU□LC**整机容许力矩（单位：N.m）** Z5BLD90-◘GUL-30S/5GU□LC Machine Allowable Torque (Unit: N.m)

减速比 Reduction Ratio / 电机轴转速 Motor Speed	5	10	15	20	30	50	100	200
200～1500RPM	1.63	3.26	4.90	6.53	9.79	16.3	32.6	65.3
2000RPM	1.38	2.76	4.14	5.52	8.28	13.8	27.6	55.2
2500RPM	1.25	2.51	3.76	5.02	7.53	12.5	25.1	50.2
3000RPM	1.05	2.09	3.14	4.18	6.27	10.46	20.91	41.83

● Z5BLD120-◘GUL-30S/5GU□LC**整机容许力矩（单位：N.m）** Z5BLD120-◘GUL-30S/5GU□LC Machine Allowable Torque (Unit: N.m)

减速比 Reduction Ratio / 电机轴转速 Motor Speed	5	10	15	20	30	50	100	200
200～1500RPM	2.41	4.83	7.24	9.65	13.1	21.8	43.5	68.0
2000RPM	2.04	4.08	6.13	8.17	11.0	18.4	36.8	66.6
2500RPM	1.86	3.71	5.57	7.43	10.0	16.7	33.5	60.5
3000RPM	1.39	2.79	4.18	5.58	8.37	13.94	27.89	55.77

注Note：表格中的所有速比旋转方向与电机转向相反。All gearbox output turn direction in form are opposite as motor turn direction.
(不同转速及速比下的力矩为ZD标准驱动器下测试所得。The torque under different speed and speed ratio is obtained under the ZD standard.)

弧锥直角减速电机 Arc Cone Right Angle Speed Reducer Motor

Z5BLD120-◘GU-30S/5GU□RC ◘—电压 Voltage 24/36/48/110/220
□—速比数值 Velocity Ratio Value

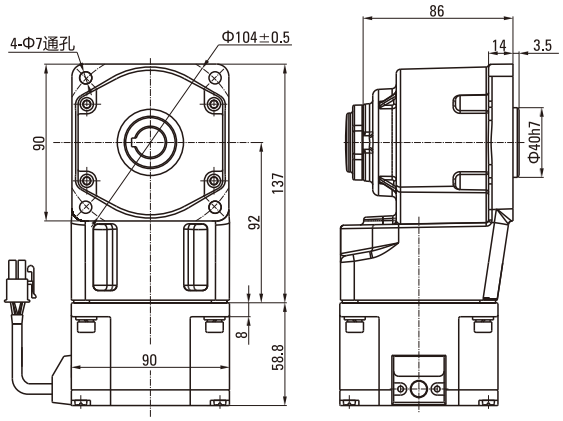

输出轴结构

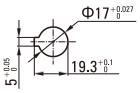

Z5BLD120-◘GU-30S/5GU□RT ◘—电压 Voltage 24/36/48/110/220
□—速比数值 Velocity Ratio Value

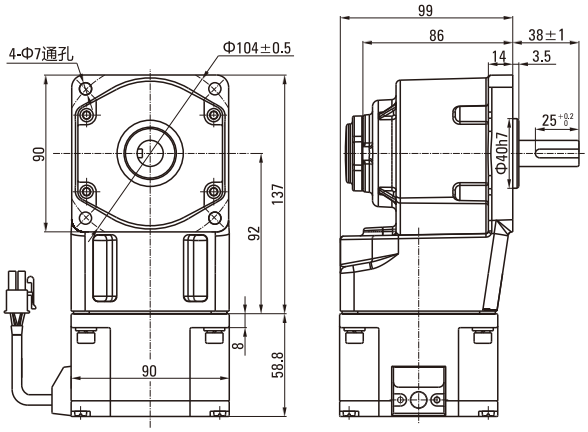

输出轴结构

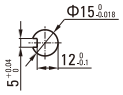

Z5BLD60-◘GU-30S/5GU□RC/RT整机容许力矩（单位：N.m） Z5BLD60-◘GU-30S/5GU□RC/RT Machine Allowable Torque (Unit: N.m)

型号 Model	减速比 Reduction Ratio / 电机轴转速 Motor Speed	7.5	9	10	12.5	15	18	20	25	30	36	50	60	75	90	100	120	150	180
Z5BLD60-◘GU	200～1500RPM	1.81	2.17	2.41	3.02	3.62	4.34	4.35	5.44	6.53	7.83	9.83	10.0	10.0	10.0	10.0	10.0	10.0	10.0
	2000RPM	1.53	1.84	2.04	2.55	3.06	3.68	3.68	4.60	5.52	6.63	8.32	9.98	10.0	10.0	10.0	10.0	10.0	10.0
	2500RPM	1.39	1.67	1.86	2.32	2.78	3.34	3.35	4.18	5.02	6.02	7.56	9.08	10.0	10.0	10.0	10.0	10.0	10.0
	3000RPM	0.95	1.13	1.26	1.58	1.89	2.27	2.52	3.15	3.78	5.02	6.97	8.37	10.0	10.0	10.0	10.0	10.0	10.0

Z5BLD90-◘GU-30S/5GU□RC/RT整机容许力矩（单位：N.m） Z5BLD90-◘GU-30S/5GU□RC/RT Machine Allowable Torque (Unit: N.m)

型号 Model	减速比 Reduction Ratio / 电机轴转速 Motor Speed	7.5	9	10	12.5	15	18	20	25	30	36	50	60	75	90	100	120	150	180
Z5BLD90-◘GU	200～1500RPM	2.72	3.26	3.62	4.53	5.43	6.52	6.53	8.16	9.79	11.8	14.7	17.7	20.0	20.0	20.0	20.0	20.0	20.0
	2000RPM	2.30	2.76	3.06	3.83	4.59	5.51	5.52	6.90	8.28	9.94	12.5	15.0	18.7	20.0	20.0	20.0	20.0	20.0
	2500RPM	2.09	2.51	2.78	3.48	4.18	5.01	5.02	6.27	7.53	9.04	11.3	13.6	17.0	20.0	20.0	20.0	20.0	20.0
	3000RPM	1.42	1.70	1.89	2.36	2.84	3.40	3.78	4.73	5.67	7.53	10.46	12.55	15.69	18.82	20.0	20.0	20.0	20.0

Z5BLD120-◘GU-30S/5GU□RC/RT整机容许力矩（单位：N.m） Z5BLD120-◘GU-30S/5GU□RC/RT Machine Allowable Torque (Unit: N.m)

型号 Model	减速比 Reduction Ratio / 电机轴转速 Motor Speed	7.5	9	10	12.5	15	18	20	25	30	36	50	60	75	90	100	120	150	180
Z5BLD120-◘GU	200～1500RPM	3.62	4.34	4.35	5.44	6.53	7.83	7.87	9.83	11.8	14.2	19.7	20.0	20.0	20.0	20.0	20.0	20.0	20.0
	2000RPM	3.06	3.68	3.68	4.60	5.52	6.63	6.66	8.32	9.98	12.0	16.6	20.0	20.0	20.0	20.0	20.0	20.0	20.0
	2500RPM	2.78	3.34	3.35	4.18	5.02	6.02	6.05	7.56	9.08	10.9	15.1	18.2	20.0	20.0	20.0	20.0	20.0	20.0
	3000RPM	1.89	2.27	2.52	3.15	3.78	4.54	5.04	6.30	7.56	10.04	13.94	16.73	20.0	20.0	20.0	20.0	20.0	20.0

注Note：表格中的▭（灰底部分）表示旋转方向与电机转向一致。The ▭ (gray) in the table indicates that the rotation direction is consistent with the motor.
(不同转速及速比下的力矩为ZD标准驱动器下测试所得。The torque under different speed and speed ratio is obtained under the ZD standard.)

104系列永磁无刷齿轮减速电机
104 SERIES OF BRUSHLESS DC MOTOR

电机基本特性 Basic Characteristics Of Motor

● 200W (DC电源时适用于24VDC/36VDC/48VDC) 200W (DC Power Supply When Applied To 24VDC/36VDC/48VDC)

额定功率(连续) Rated power (Continuous)		W	200(200W/400W)		
额定转速 Rated speed		r/min	3000		
额定转矩 Rated torque		N.m	0.636		
瞬时最大转矩 Instantaneous maximum torque		N.m	0.955		
转子转动惯量 Rotor moment of inertia		$J:X10^{-4}kg.m^2$	0.460		
速度控制范围 Speed control range		RPM	高压High pressure 200-2500RPM (低压Low pressure 200-3000RPM)		
速率变化率 Speed control range	对负载 On load		±1.0%以下: 条件 0~额定转矩、额定转速、额定电压、常温 Below ±1%: condition 0~rated torque, rated speed, rated voltage, room temperature		
	对电压 On voltage		±1.0%以下: 条件 额定电压±10%、额定转速、额定负载、常温 Below±1%: condition rated voltage ±10%, rated speed, rated load, room temperature		
	对温度 On temperature		±1.0%以下: 条件使用环境温度-10ºC~+40ºC额定转速、额定负载、额定电压 Below±1%: Conditions of ambient temperature -10ºC~+40ºC rated voltage, rated load and rated speed		
电源输入 Power input	额定电压 Rated voltage	V	单相Single phase 110V	单相Single phase 220V	36VDC(可选Optional 48VDC)
	电压容许范围 Voltage tolerance range		±10%		
	频率 Frequency	Hz	50/60		/
	频率容许范围 Frequency tolerance range		±5%		/
	额定输入电流 Rated input current	A	4.7	2.4	7.5
	瞬时最大输入电流 Instantaneous maximum input current	A	9.0	4.8	11.5

圆轴型光电机 Circular Shaft Type Optical Motor

● Z6BLD200-□A-30S □—电压 Voltage 24/36/48/110/220

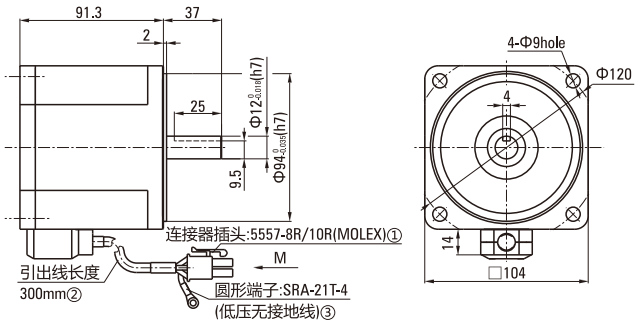

● Z6BLD200-220A-30S 曲线图 Diagram
(ZD标准驱动器 ZD Standard Drive)

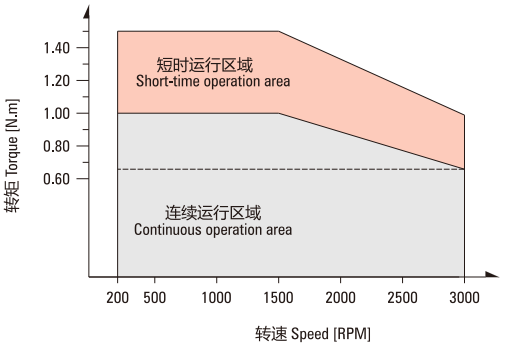

①Connector: 5557-8R/10R (MOLEX) ②Lead wire length 300mm ③Round terminal: SRA-21T-4 (Low ground)

● **低压电机接线插孔对应信号说明**
Low Voltage Wrie Plughole Corresp-onding Signal Explanation

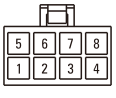

1	2	3	4	5	6	7	8
绿(粗)	黑(细)	蓝(细)	红(细)	黄(粗)	蓝(粗)	绿(细)	黄(细)
V	GND	Hw	Vcc+5V	U	W	Hv	Hu

● **高压电机接线插孔对应信号说明**
High Voltage Wrie Plughole Corresp-onding Signal Explanation

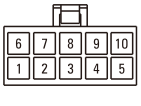

1	2	3	4	5	6	7	8	9	10
黄(细)	绿(细)	蓝(细)	金属丝网	黑(细)	蓝(粗)	黄(粗)	绿(粗)		红(细)
Hu	Hv	Hw		GND	W	U	V		Vcc+5V

200W

● **平行轴减速机** Parallel Shaft Speed Reducer

Z6BLD200-◘GU-30S/6GU□K ◘—电压 Voltage 24/36/48/110/220
□—速比数值 Velocity Ratio Value

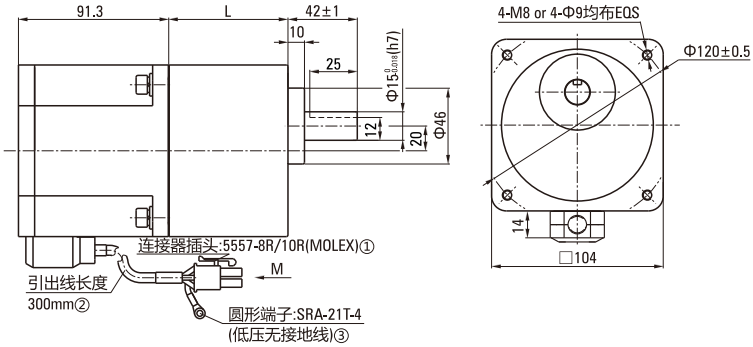

①Connector: 5557-8R/10R (MOLEX) ②The sheath length of lead line 300mm ③Round terminal: SRA-21T-4 (Low ground)

● **键・键槽** Key ・Keyway

减速器型号 Gearhead Model	减速比 Gear Ratio	L尺寸 Dimension
6GU□K	3～200	72

●减速器型号的□中为减速比的数值
Enter the gear ratio in the box (□) within the model name

● Z6BLD200-◘GU-30S/6GU□K**整机容许力矩（单位：N.m）** Z6BLD200-◘GU-30S/6GU□K Machine Allowable Torque (Unit: N.m)

型号 Model	减速比 Reduction Ratio / 电机轴转速 Motor Speed	3	3.6	5	6	7.5	9	12.5	15	18	25	30	36	50	60	75	90	100	120	150	180	200
Z6BLD200-◘GU	200～1500RPM	2.41	2.90	4.02	4.83	6.03	7.24	9.06	10.9	13.1	16.4	19.7	23.6	32.8	39.3	40.0	40.0	40.0	40.0	40.0	40.0	40.0
	2000RPM	2.04	2.45	3.40	4.08	5.11	6.13	7.67	9.20	11.0	13.9	16.6	20.0	27.7	33.3	40.0	40.0	40.0	40.0	40.0	40.0	40.0
	2500RPM	1.86	2.23	3.09	3.71	4.64	5.57	6.97	8.37	10.0	12.6	15.1	18.2	25.2	30.3	37.8	40.0	40.0	40.0	40.0	40.0	40.0
	3000RPM	1.55	1.86	2.58	3.09	3.87	4.64	5.81	6.97	8.37	10.44	12.53	15.04	20.88	25.06	31.32	37.59	40.0	40.0	40.0	40.0	40.0

● Z6BLD400-◘GU-30S/6GU□K**整机容许力矩（单位：N.m）** Z6BLD400-◘GU-30S/6GU□K Machine Allowable Torque (Unit: N.m)

型号 Model	减速比 Reduction Ratio / 电机轴转速 Motor Speed	3	3.6	5	6	7.5	9	12.5	15	18	25	30	36	50	60	75	90	100	120	150	180	200
Z6BLD400-◘GU	200～1500RPM	4.82	5.80	8.04	9.66	12.06	14.48	18.12	21.8	26.2	32.8	39.4	40.0	40.0	40.0	40.0	40.0	40.0	40.0	40.0	40.0	40.0
	2000RPM	4.08	4.90	6.80	8.16	10.22	12.26	15.34	18.4	22.0	27.8	33.2	40.0	40.0	40.0	40.0	40.0	40.0	40.0	40.0	40.0	40.0
	2500RPM	3.72	4.46	6.18	7.42	9.28	11.14	13.94	16.74	20.0	25.2	30.2	36.4	40.0	40.0	40.0	40.0	40.0	40.0	40.0	40.0	40.0
	3000RPM	3.09	3.71	5.16	6.19	7.74	9.28	11.62	13.94	16.73	20.88	25.06	30.07	40.0	40.0	40.0	40.0	40.0	40.0	40.0	40.0	40.0

注Note：表格中的▭（灰底部分）表示旋转方向与电机转向一致。The ▭ (gray) in the table indicates that the rotation direction is consistent with the motor.
(不同转速及速比下的力矩为ZD标准驱动器下测试所得。The torque under different speed and speed ratio is obtained under the ZD standard.)

● L**型减速机** L Type Speed Reducer

Z6BLD200-◘GUL-30S/6GU□LC ◘—电压 Voltage 24/36/48/110/220
□—速比数值 Velocity Ratio Value

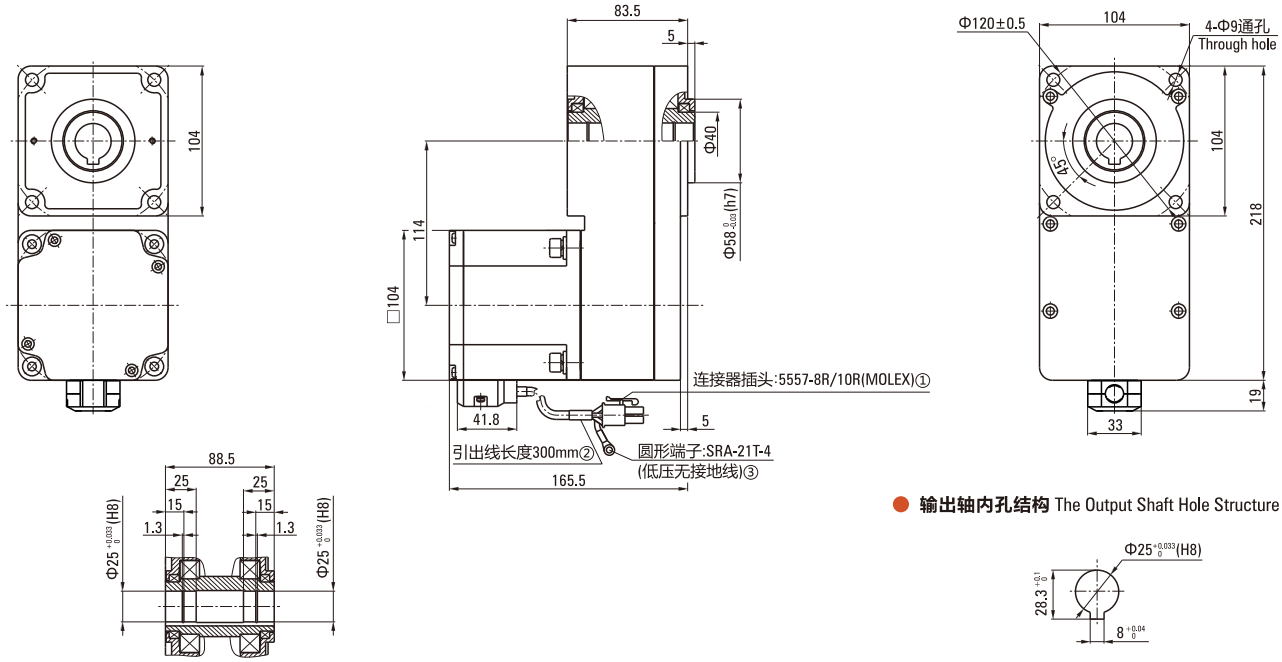

● **输出轴内孔结构** The Output Shaft Hole Structure

①Connector: 5557-8R/10R (MOLEX) ②Lead wire length 300mm ③Round terminal: SRA-21T-4 (Low ground)

● Z6BLD200-◘GUL-30S/6GU□LC **整机容许力矩（单位：N.m）** Z6BLD200-◘GUL-30S/6GU□LC Machine Allowable Torque (Unit: N.m)

减速比 Reduction Ratio / 电机轴转速 Motor Speed	5	15	20	30	40	50	100
200～1500RPM	4.02	12.1	16.10	21.80	32.20	40.20	80.40
2000RPM	3.40	10.2	13.60	20.40	27.20	34.00	68.00
2500RPM	3.09	9.27	12.36	18.54	24.72	30.90	61.80
3000RPM	2.32	6.96	9.280	13.92	18.56	23.20	46.40

● Z6BLD400-◘GUL-30S/6GU□LC **整机容许力矩（单位：N.m）** Z6BLD400-◘GUL-30S/6GU□LC Machine Allowable Torque (Unit: N.m)

减速比 Reduction Ratio / 电机轴转速 Motor Speed	5	15	20	30	40	50	100
200～1500RPM	8.04	24.20	32.20	43.60	64.40	80.40	120.0
2000RPM	6.80	20.40	27.20	40.80	54.40	68.00	120.0
2500RPM	6.18	18.54	24.72	37.08	49.44	61.80	120.0
3000RPM	4.64	13.92	18.56	27.84	37.12	46.40	92.80

注Note：表格中的所有速比旋转方向与电机转向相反。All gearbox output turn direction in form are opposite as motor turn direction.
(不同转速及速比下的力矩为ZD标准驱动器下测试所得。The torque under different speed and speed ratio is obtained under the ZD standard.)

● **弧锥直角减速电机** Arc Cone Right Angle Speed Reducer Motor

Z6BLD200-◘GU-30S/6GU□RC ◘—电压 Voltage 24/36/48/110/220
□—速比数值 Velocity Ratio Value

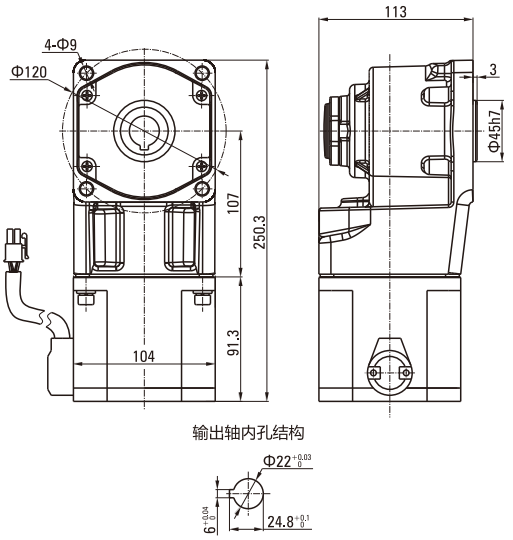

Z6BLD200-◘GU-30S/6GU□RT ◘—电压 Voltage 24/36/48/110/220
□—速比数值 Velocity Ratio Value

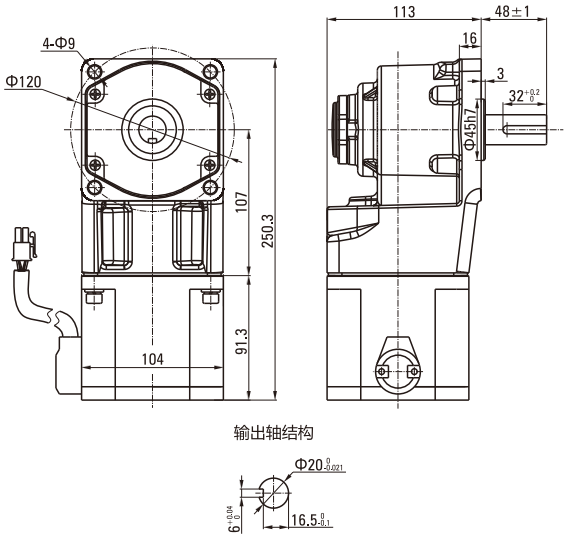

● Z6BLD200-◘GU-30S/6GU□RC/RT**整机容许力矩（单位：N.m）** Z6BLD200-◘GU-30S/6GU□RC/RT Machine Allowable Torque (Unit: N.m)

型号 Model	减速比 Reduction Ratio / 电机轴转速 Motor Speed	7.5	9	12.5	15	18	25	30	36	50	60	75	90	100	120	150	180	200
Z6BLD200-◘GU	200～1500RPM	6.03	7.24	9.06	10.9	13.1	16.4	19.7	23.6	32.8	39.3	40.0	40.0	40.0	40.0	40.0	40.0	40.0
	2000RPM	5.11	6.13	7.67	9.20	11.0	13.9	16.6	20.0	27.7	33.3	40.0	40.0	40.0	40.0	40.0	40.0	40.0
	2500RPM	4.64	5.57	6.97	8.37	10.0	12.6	15.1	18.2	25.2	30.3	37.8	40.0	40.0	40.0	40.0	40.0	40.0
	3000RPM	3.15	3.78	5.25	6.30	7.56	10.51	12.61	15.13	23.24	27.89	34.86	40.0	40.0	40.0	40.0	40.0	40.0

● Z6BLD400-◘GU-25S/6GU□RC/RT**整机容许力矩（单位：N.m）** Z6BLD400-◘GU-25S/6GU□RC/RT Machine Allowable Torque (Unit: N.m)

型号 Model	减速比 Reduction Ratio / 电机轴转速 Motor Speed	7.5	9	12.5	15	18	25	30	36	50	60	75	90	100	120	150	180	200
Z6BLD400-◘GU	200～1500RPM	12.06	14.48	18.12	21.8	26.2	32.8	39.4	40.0	40.0	40.0	40.0	40.0	40.0	40.0	40.0	40.0	40.0
	2000RPM	10.22	12.26	15.34	18.4	22.0	27.8	33.2	40.0	40.0	40.0	40.0	40.0	40.0	40.0	40.0	40.0	40.0
	2500RPM	9.28	11.14	13.94	16.74	20.0	25.2	30.2	36.4	40.0	40.0	40.0	40.0	40.0	40.0	40.0	40.0	40.0
	3000RPM	6.30	7.56	10.51	12.61	15.13	21.01	25.21	30.25	40.0	40.0	40.0	40.0	40.0	40.0	40.0	40.0	40.0

注Note：表格中的▭（灰底部分）表示旋转方向与电机转向一致。The ▭ (gray) in the table indicates that the rotation direction is consistent with the motor.
(不同转速及速比下的力矩为ZD标准驱动器下测试所得。The torque under different speed and speed ratio is obtained under the ZD standard.)

86系列永磁无刷齿轮减速电机（GU型）
86 SERIES OF BRUSHLESS DC MOTOR (GU TYPE)

平行轴减速机 Parallel Shaft Speed Reducer

Z55BLD200-◘GUL-30S/5GU□LC ◘—电压 Voltage 24/36/48
□—速比数值 Velocity Ratio Value

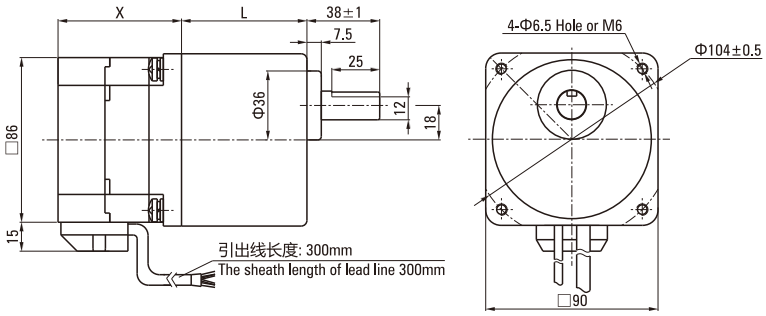

电机功率段 Motor Power Band

额定功率 (W) Rated Power	额定转速 (RPM) Rated Speed	长度X (mm) Extent
200	3000	64.5
300	3000	74.5
400	3000	84.5
500	3000	94.5
600	3000	105.5
750	3000	130.0

减速器型号 Gearhead Model	减速比 Gear Ratio	L尺寸 Dimension
5GU□KB	3～200	65.5

●减速器型号的□中为减速比的数值
Enter the gear ratio in the box (□) within the model name

键・键槽 Key ・Keyway

L型减速机 L Type Speed Reducer

Z55BLD200-◘GUL-30S/5GU□LC ◘—电压 Voltage 24/36/48
□—速比数值 Velocity Ratio Value

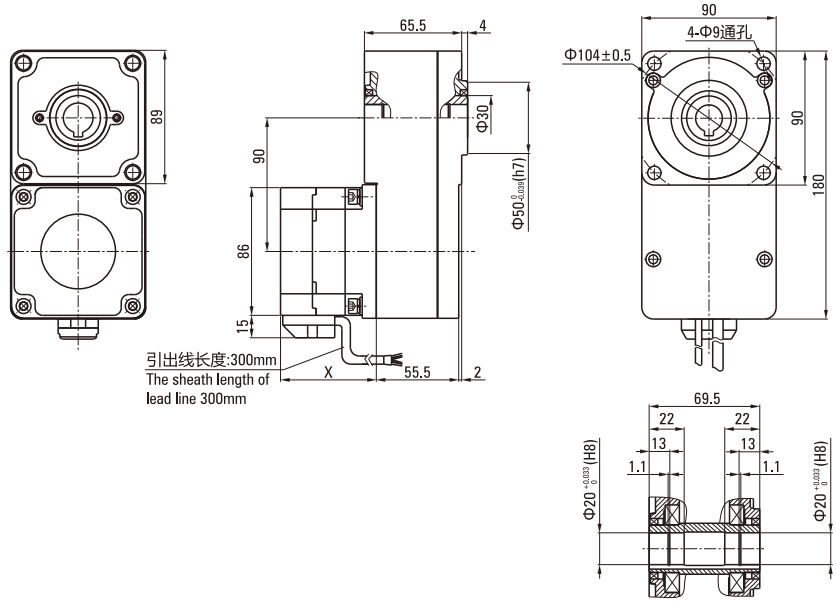

中间减速器 Decimal Gearhead

5GU□XK
□—速比数值, 一般为10 Velocity Ratio Value, Generally 10

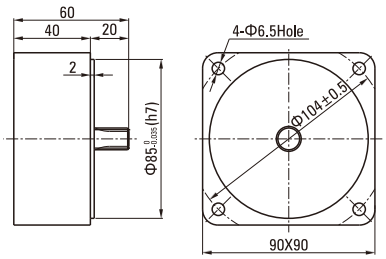

输出轴内孔结构 The Output Shaft Hole Structure

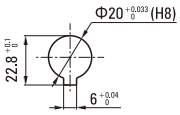

120系列永磁无刷齿轮减速电机（GU型）
120 SERIES OF BRUSHLESS DC MOTOR (GU TYPE)

750W

● **平行轴减速机** Parallel Shaft Speed Reducer

Z7BLD750-◘GV-30S/7GU□V ◘—电压 Voltage 48/220

□—速比数值 Velocity Ratio Value

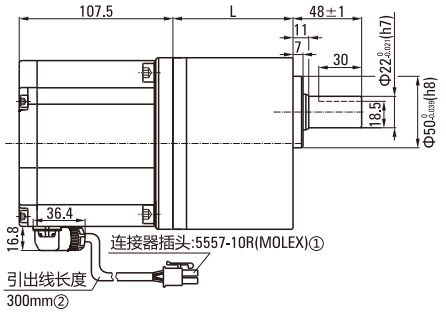

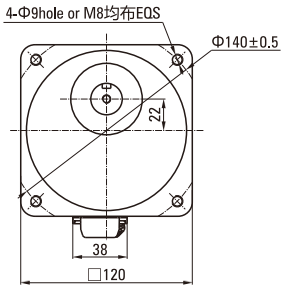

①Connector: 5557-10R (MOLEX) ②The sheath length of lead line 300mm

● **键・键槽** Key・Keyway

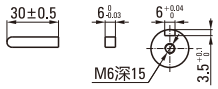

减速器型号 Gearhead Model	减速比 Gear Ratio	L尺寸 Dimension
7GU□V	5～50	84

●减速器型号的□中为减速比的数值

Enter the gear ratio in the box (□) within the model name

● Z7BLD750-◘GV-30S/7GU□V**整机容许力矩（单位：N.m）** Z7BLD750-◘GV-30S/7GU□V Machine Allowable Torque (Unit: N.m)

型号 Model	减速比 Reduction Ratio / 电机轴转速 Motor Speed	5	10	15	20	30	50
Z7BLD750-◘GV	200～1500RPM	19.34	38.68	52.29	69.72	100.00	100.00
	2000RPM	14.50	29.01	39.21	52.29	78.43	100.00
	2500RPM	11.60	23.21	31.37	41.83	62.74	100.00
	3000RPM	9.67	19.34	26.14	34.86	52.29	87.14

● Z7BLD750-◘GUL-30S/7GU□L**整机容许力矩（单位：N.m）** Z7BLD750-◘GUL-30S/7GU□L Machine Allowable Torque (Unit: N.m)

型号 Model	减速比 Reduction Ratio / 电机轴转速 Motor Speed	5	10	15	20	25	30	50	100
Z7BLD750-◘GUL	200～1500RPM	17.43	34.86	52.29	69.72	87.14	104.57	174.00	200.00
	2000RPM	13.07	26.14	39.21	52.29	65.36	78.43	130.72	200.00
	2500RPM	10.46	20.91	31.37	41.83	52.29	62.74	104.57	200.00
	3000RPM	8.71	17.43	26.14	34.86	43.57	52.29	87.14	174.00

注Note：表格中的▭（灰底部分）表示旋转方向与电机转向一致。The ▭ (gray) in the table indicates that the rotation direction is consistent with the motor.
(不同转速及速比下的力矩为ZD标准驱动器下测试所得。The torque under different speed and speed ratio is obtained under the ZD standard.)

● **L型减速机** L Type Speed Reducer

Z7BLD750-◘GUL-30S/7GU□L ◘—电压 Voltage 48/220 □—速比数值 Velocity Ratio Value

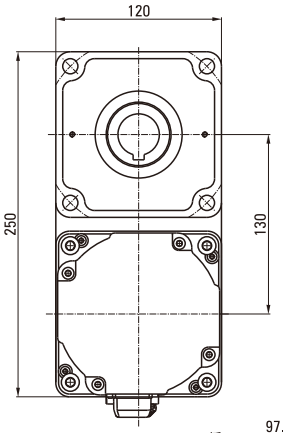

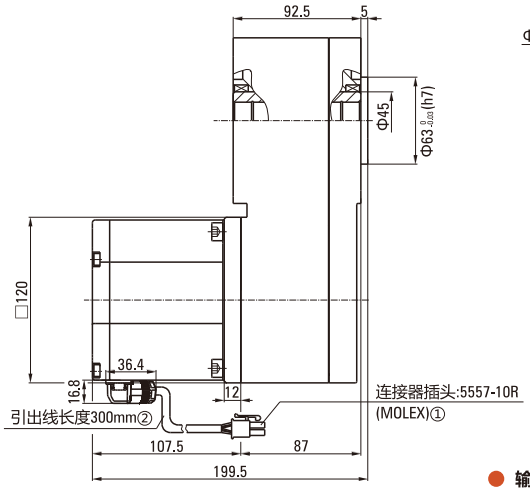

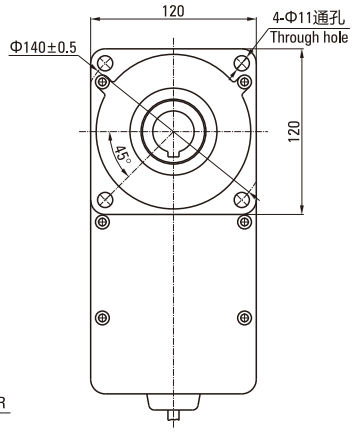

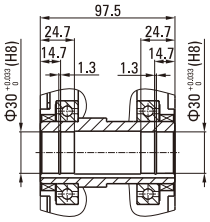

①Connector: 5557-10R (MOLEX) ②The sheath lead wire length 300mm

● **输出轴内孔结构** The Output Shaft Hole Structure

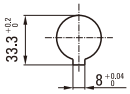

C10系列无刷驱动器
C10 SERIES BRUSHLESS DRIVERS

Z	BLD	•	C10	—	120	L/H/S2	D/X
①	②		③		④	⑤	⑥

①	公司名称 Company	Z: 中大力德 ZHONGDA LEADER	
②	类型 Type	BLD: 无刷电机驱动器 Brushless driver	
		DRV: 驱动器及相关产品 Driver and related products	
③	版本 Version	C10: C10、C13系列 Series	
④	功率 Power	120	200
		120W	200W
⑤	电压 Voltage	L: 低压DC24V～48V Lower voltage	L2: 低压DC24V Lower voltage
		H/S2: 高压 High voltage AC220V/50Hz	
⑥	功能 Feature	D: 带数字显示 With display	
		X: 扩展功能 With extended function	

ZBLD.C10-200L

PRODUCT DIAGRAM
C10系列产品示意图

包括五款：
ZBLD.C10-120LD
ZBLD.C10-120LDX
ZBLD.C10-200HD
ZBLD.C10-200HDX
ZBLD.C10-200L

ZBLD.C10-120LD

ZBLD.C10-120LDX

ZBLD.C10-200HD

ZBLD.C10-200HDX

C10系列无刷驱动器特点
Features of C10 series brushless motor driver

- 数字显示：采用4位数码管显示：运行状态、设定速度、运行速度、故障指示。
  Digital display: 4-digit digital tube display: running status, set speed, running speed, fault indication.
- 稳速运行：采用速度闭环控制（控制精度±0.5%）。
  Stable speed operation: adopt speed closed-loop control (control accuracy ±0.5%).

● ZDRV.C13-90L2

● ZDRV.C13-120S2

- 输入输出：2组NPN型数字输入接口（正转和反转）；1组开漏型数字输出接口（故障输出）。
  Input and output: 2 groups of NPN type digital input interfaces (forward and reverse); 1 group of open-drain digital output interfaces (fault output).
- 速度给定：通过面板旋钮设定运行速度，方便快捷。
  Speed setting: Set the running speed through the panel knob, which is convenient and quick.
- 完善的故障检测及保护功能：1、欠压、过压、过流、过载、堵转、短路、缺相、过温等多种故障检测；2、故障发生后，驱动器根据故障类型进行相应的保护动作；3、故障信息可通过数码管进行显示。
  Perfect fault detection and protection functions: 1. Various fault detections such as undervoltage, overvoltage, overcurrent, overload, locked rotor, short circuit, phase loss, overtemperature, etc.; 2. After the failure occurs, the drive carries out corresponding protection actions according to the type of failure; 3. The fault information can be displayed through the digital tube.
- 扩展功能包括：扩展3组NPN型数字量输入接口、1组模拟量接口、1组485通讯控制接口。
  Extended functions include: expansion of 3 sets of NPN digital input interfaces, 1 set of analog quantity interfaces, and 1 set of 485 communication control interfaces.

C20系列无刷驱动器
C20 SERIES BRUSHLESS DRIVERS

Z	BLD	•	C20	—	120	L/H/S2	C/R
①	②		③		④	⑤	⑥

①	公司名称 Company	Z: 中大力德 ZHONGDA LEADER		
②	类型 Type	BLD: 无刷电机驱动器 Brushless driver		
		DRV: 驱动器及相关产品 Driver and related products		
③	版本 Version	C20: C20系列 Series		
④	功率 Power	120	400	800
		120W	400W	800W
⑤	电压 Voltage	L: DC24V～48V (L1:12V; L2:24V; L3:36V; L4:48V)		
		H/S2: 高压 High voltage AC220V		
⑥	功能 Feature	C: CAN通信 Can communication		
		R: 带485通讯 485 communication		

C20系列产品示意图 PRODUCT DIAGRAM

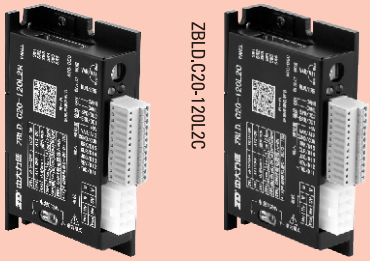

ZBLD.C20-120L2C　ZBLD.C20-120L2R

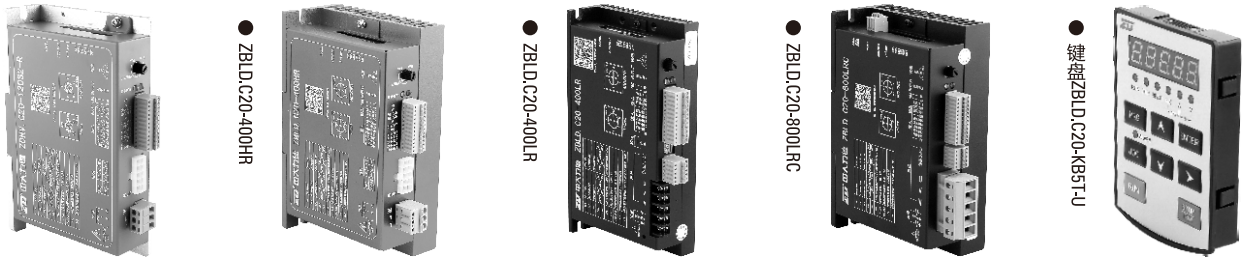

● ZDRV.C20-120S2-R　● ZBLD.C20-400HR　● ZBLD.C20-400LR　● ZBLD.C20-800LRC　● 键盘ZBLD.C20-KB5T-U

C20系列无刷驱动器特点 Features of C20 series brushless motor driver

- 多种运行方式：开环、闭环（控制精度±0.5%）。
  A variety of operating modes: open-loop, closed-loop (control accuracy ± 0.5%).
- 多种命令给定：多功能输入端子控制、通讯控制、外置键盘控制。
  Multiple commands given: multi-function input terminal control, communication control, external keyboard control.
- 多种速度给定：内置旋钮、外部模拟电压（0～5/10V）或PWM（3k～10kHz）、HDI高速脉冲输入0～20KHZ频率给定、通讯给定、键盘给定、多段速度、简易PLC控制（视具体型号而定）。
  Various speed settings: built-in knob, external analog voltage (0～5/10V) or PWM (3k～10kHz), HDI high-speed pulse input 0～20KHZ frequency setting, communication setting, keyboard setting, multi-speed, Simple PLC control (depending on the specific model).
- 加/减速度控制：0.3s～10s范围，可通过旋钮调节、通讯调节和键盘调节。
  Acceleration/deceleration control: 0.3s～10s range, can be adjusted by knob, communication adjustment and keyboard adjustment.
- 电子刹车功能：实现快速电磁制动。
  Electronic brake function: realize fast electromagnetic braking.
- 多功能输入接口：5个数字量输入，用户可通过键盘自定义为：正转、反转、点动、自由停止、电子刹车、多段速度等多种功能输入。
  Multi-function input interface: 5 digital inputs, which can be customized by the user through the keyboard: forward, reverse, jog, free stop, electronic brake, multi-speed and other functional inputs.
- 多功能输出接口：2个数字量输出用户可通过键盘自定义为：运行中、故障、速度输出、过载预警、虚拟端子输出等多种功能输出。
  Multi-function output interface: 2 digital outputs can be customized by the user through the keyboard: running, fault, speed output, overload warning, virtual terminal output and other functional outputs.
- 完善的故障检测及保护功能：欠压、过压、过流、过载、堵转、短路、缺相、过温等多种故障检测；故障发生后，驱动器根据故障类型进行相应的保护动作；故障信息可通过LED灯或键盘进行显示。
  Perfect fault detection and protection functions: under-voltage, over-voltage, over-current, overload, locked-rotor, short-circuit, phase-loss, over-temperature and other fault detection; after a fault occurs, the driver performs corresponding protection actions according to the type of fault; Fault information can be displayed by LED lights or keyboard.

键盘配件：外引键盘可用于设置驱动器参数、读取驱动器状态，实现键盘控制、多功能输入、多功能输出、多段速度、简易PLC等功能。
Keyboard accessories: The external keyboard can be used to set parameters, read status, realize keyboard control, multi-function input, multi-function output, multi-speed, simple PLC and other fuufunfunctions.function input, multi-function output, multi-speed, simple PLC and other functions.

C30系列无刷驱动器
C30 SERIES BRUSHLESS DRIVERS

Z	DRV	•	C30	—	200	L/S2	B/C/R
①	②		③		④	⑤	⑥

①	公司名称 Company	Z: 中大力德 ZHONGDA LEADER		
②	类型 Type	DRV: 驱动器及相关产品 Driver and related products		
③	版本 Version	C30: C30系列 Series		
④	功率 Power	120	200	400
		120W	200W	400W
⑤	电压 Voltage	L: DC24V～48V (L1:12V; L2:24V; L3:36V; L4:48V)		
		S2: 高压 High voltage AC220V		
⑥	功能 Feature	B: 带制动/刹车 With brake		
		R: 带485通讯 With 485 communication		
		C: CAN通信 With Can communication		
		D: 带数字显示 With display		

PRODUCT DIAGRAM

ZDRV.K10-ENT 产品示意图

应用于：ZDRV.C30-120S2-DR
ZDRV.C30-400S2-DR
ZDRV.C30-200L-BCR
ZDRV.C30-400L-BCR

● ZDRV.C30-120S2-DR

● ZDRV.C30-400S2-DR

● ZDRV.C30-200L-BCR

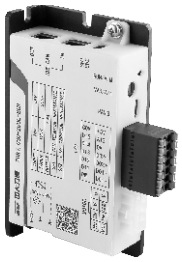

● ZDRV.C30-400L-BCR

C30系列无刷驱动器特点
Features of C30 series brushless motor driver

- 多种运行方式：开环、闭环（控制精度±0.5%）。
  Multiple operation modes: open-loop, closed-loop (control accuracy ±0.5%).
- 多种控制方式：四象限运行、零速保持、力矩/速度模式、零速定位。
  Multiple control modes: four-quadrant operation, zero-speed hold, torque/speed mode, zero-speed positioning.
- 多种命令给定：多功能输入端子控制（支持NPN、PNP输入）；通讯控制；外置键盘控制。
  A variety of command given: multi-function input terminal control (support NPN, PNP input); communication control; external keyboard control.
- 多种速度给定：内置旋钮、外部模拟电压（0～5/10V）或PWM（3k～10kHz）、HDI高速脉冲输入0～20KHZ频率给定、通讯给定、键盘给定、多段速度、简易PLC控制（视具体型号而定）。
  Various speed settings: built-in knob, external analog voltage (0～5/10V) or PWM (3k～10kHz), HDI high-speed pulse input 0～20KHZ frequency setting, communication setting, keyboard setting, multi-speed, Simple PLC control (depending on the specific model).
- 加/减速度控制：0.3s～10s可通过通讯调节和键盘调节。
  Acceleration/deceleration control: 0.3s～10s can be adjusted by communication and keyboard.
- 电子刹车功能：实现快速电磁制动，可外接能耗电阻制动。
  Electronic brake function: realize fast electromagnetic braking, and external energy consumption resistance braking can be realized.
- 多功能输入接口：5个数字量输入（支持NPN和PNP）用户可通过键盘自定义为：正转、反转、点动、自由停止、电子刹车、多段速度等多种功能输入。
  Multi-function input interface: 5 digital inputs (supports NPN and PNP), which can be customized by the user through the keyboard: forward, reverse, jog, free stop, electronic brake, multi-speed and other functional inputs.
- 多功能输出接口：2个数字量输出用户可通过键盘自定义为：运行中、故障、速度输出、过载预警、虚拟端子输出等多种功能输出。
  Multi-function output interface: 2 digital outputs can be customized by the user through the keyboard: running, fault, speed output, overload warning, virtual terminal output and other functional outputs.
- 完善的故障检测及保护功能：欠压、过压、过流、过载、堵转、短路、缺相等多种故障检测；故障发生后，驱动器根据故障类型进行相应的保护动作；故障信息可通过LED灯或键盘进行显示。
  Perfect fault detection and protection functions: under-voltage, over-voltage, over-current, overload, locked rotor, short-circuit, lack of etc. fault detection; after a fault occurs, the driver will perform corresponding protection actions according to the type of fault; fault information can be passed through LED lights or keyboard display.

通用规格
COMMON SPECIFICATIONS

电动机的容许悬挂负载•容许轴向负载 Permissible Overhung Load And Permissible Thrust Load Of Motor

容许悬挂负载 Permissible Overhung Load

电动机 Motor		容许悬挂负载 Permissible Overhung Load	
安装尺寸 Motor Frame Size □(mm)	输出轴直径 Output Shaft Diameter □(mm)	距轴端的距离 Distance From Shaft End	
		10mm	20mm
42	5	40	-
60	6	50	110
70	6	40	60
80	8	90	140
	10	110	120
90	10	140	200
	12	240	270
100	14	320	350

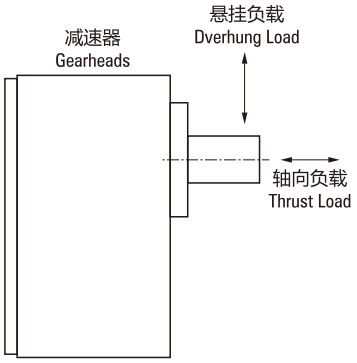

- 容许轴向负载。
- 请尽量不要施加轴向负载。即使不得已的情况下，请将轴向负载控制在电动机重量的一半以下。
- Permissible thrust load.
- Avoid thrust loads as much as possible. If thrust load is unavoidable, keep it to half or less of the motor mass.

电动机的容许悬挂负载•容许轴向负载 Allowable Suspension Load Of Motor • Allowable Axial Load

型号 Model	减速比 Gear Ratio	最大容许转矩 Maximum Permissible Torque N.m	容许悬挂负载 Permissible Overhung Load N		容许轴向 Permissible Thrust Load N
			距轴端10mm 10mm From Shaft End	距轴端20mm 20mm From Shaft End	
2GN□K	3～18	3.0	50	80	30
	25～200		120	180	
4GN□K	3～18	8.0	100	150	50
	25～200		200	300	
5GN□K	3～18	10	250	350	100
	25～200		300	450	
5GU□KB 5GU□K	3～9	20	400	500	150
	12.5～18		450	600	
	25～200		500	700	
6GU□K	3～200	40	1100	1500	300

减速器的容许负载惯性惯量J Permissible Load Inertia For Gearhead J

- 连接到减速器上的负载惯性惯量（J）较大的情况下，在频繁的间歇运转的起动瞬间（或以电磁制动及制动器进行急停时）会出现瞬时较大的转矩。该冲击负载过大会导致减速器及电动机损坏。
- 下面列出了电动机轴上的容许负载惯性惯量的值，使用时请控制在此数值下。三相电动机的容许负载惯性惯量是指从一旦停止运转后再进行反转时的数值。
- 请利用下面的公式计算减速器输出轴上的容许惯性惯量（J）。
- 通过带电磁制动电动机、制动器及速度控制电动机的瞬时停止来运转容许负载惯性惯量时的使用寿命为200万次。
- When a high load inertia (J) is connected to a gearhead, high torque is exerted instantaneously on the gearhead when starting up in frequent, discontinuous operations (or when stopped by an electromagnetic brake, or when stopped instantaneously by a brake pack). Excessive impact loads can cause the gearhead or motor damage.
- The table below gives values for permissible load inertia on the motor shaft. Use the motor and gearhead within these parameters. The permissible inertial load value shown for three-phase motors is the value when reversing after a stop.
- The permissible load inertia (J) on the gearhead output shaft is calculated with the following equation.
- The life of the gearhead when operating at the permissible inertial load with instantaneous stops of the motors with electromagnetic brakes, brake packs or speed control motors is at least 2 million cycles.

减速器输出轴上的容许负载惯性惯量 Permissible Load Inertia For Gear Head Output Shaft

减速比1/3 ~ 1/50时 JG=JM×I
减速比1/60以上时 JG=JM×2500

JG: 减速器输出轴容许负载惯性惯量J (×10kg.m平方)
JM: 减速器输出轴容许负载惯性惯量J (×10kg.m平方)
I: 减速比 (例: 减速比1/3时 i=3)

Gear ratio 1/3 ~ 1/50 JG=JM×I
Gear ratio 1/60 or high JG=JM×2500

JG: Permissible load inertia gearhead output shaft J (×10kg.m^2)
JM: Permissible load inertia at the motor shaft J (×10kg.m^2)
I: Gear ratio (Example: i=3 means the gear ratio or 1/3)

电动机轴上的容许负载惯性惯量 Permissible Load Inertia At The Motor Shaft

电动机电源相数 No.Of Phase	安装尺寸 Motor Frame Size	输出功率 Output Power	电动机轴上的容许负载惯性惯量 Permissible Load Inertia At The Motor Shaft	
			J(×10^{-4}kg.m^2)	GD^2 (kg.m^2)
单相 Single-phase	42	1W, 3W	0.016	0.07
	60	3W※, 6W	0.062	0.25
	70	6W※, 15W	0.14	0.52
	80	10W※, 25W	0.31	1.2
	90	20W※, 40W	0.75	3
		60W	1.1	4.6
		90W	1.1	4.6
		120W	1.1	4.6
	100	120W	2	8
		140W	2	8
		180W	2	8
三相 Three-phase	60	6W	0.062	0.25
	70	15W	0.14	0.52
	80	25W	0.31	1.2
	90	40W	0.75	3
		60W	1.1	4.6
		90W	1.1	4.6
		120W	1.1	4.6
	100	120W	2	8
		140W	2	8
		180W	2	8
直流 DC Power	60	6W, 10W, 15W	0.062	0.25
	70	15W	0.14	0.52
	80	25W, 40W	0.31	1.2
	90	40W	0.75	3
		60W	1.1	4.6
		90W	1.1	4.6
		120W	1.1	4.6
	100	250W	2	8

※是指转矩电动机的输出功率 ※Output power for torque motors

减速器容许转矩的计算 The Calculation For The Permissible Torque Of Gearhead

部分机型并未列在容许转矩表上，需要时可按以下公式计算。
Permissible torque for some products are omitted. In that case, use the equation below to catculate the permissible torque.

容许转矩 Permissible torque TG=TM×i×η

TG: 减速器容许转矩 Permissible torque of greadhead
TM: 电动机转矩 Motor torque
i: 减速器减速比 Gear ratio gearhead
η: 减速器传动效率 Gearhead efficiency

减速器传动效率 Gearhead Efficiency

型号Model \ 减速比Gear Ratio	3	3.6	5	6	7.5	9	12.5	15	18	25	30	36	50	60	75	90	100	120	150	180	200
2GN□K 4GN□K 4GN□RC/RT 5GN□K	81%									73%			66%								
5GU□KB 5GU□RC/RT	81%						73%			66%						59%					
6GU□K 6GU□RC/RT	81%						73%			66%											

型号Model \ 减速比Gear Ratio	5	10	15	20	30	50	100	200
2GN□L	83%	89%						
4GN□L	74%							
5GU□L	74%							
6GU□L	74%	89%						-

选购配件
ACCESSORIES

电动机•减速器用安装底座 Motor • Gearhead Moumin Brackets

便于安装固定电动机、减速器的专用安装底座。为可对应大功率电动机、减速器的高强度型产品。安装底座上钻有螺孔，请用减速器附属的螺丝来组合电动机与减速器。安装电动机单体时，请另用安装用螺丝。

Eight kinds of mounting brackets for motors and gearheads are available. They are high-strength type. which can be used with high power motor/gearheads. These brackets come with tapped. To mount the motor and gearhead, simply fasten with the screws provided to the gearhead. To mount the motor alone. mounting screws must be provided separetely.

安装尺寸80mm用 Motor Frame Size: 80mm

型号 Model: ZD4M5 重量 Weight: 200g 材质 Material: 铝合金 Aluminum
适用产品 Applicable products: 4GN 减速器 4GN Gearhead
安装尺寸 □80mm 电动机 Motor with the frame size of □80mm

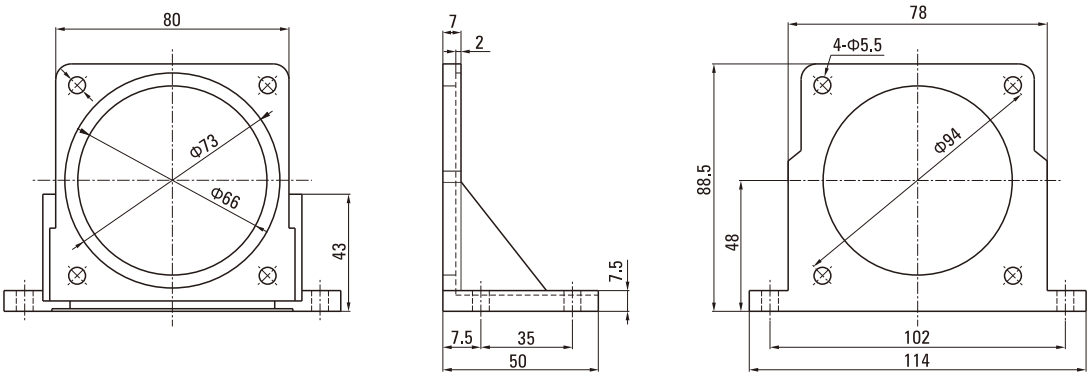

安装尺寸90mm用 Motor Frame Size: 90mm

型号 Model: ZD5M5 重量 Weight: 270g 材质 Material: 铝合金 Aluminum
适用产品 Applicable products: 5GN、5GU 减速器 5GN、5GU Gearhead
安装尺寸 □90mm 电动机 Motor with the frame size of □90mm

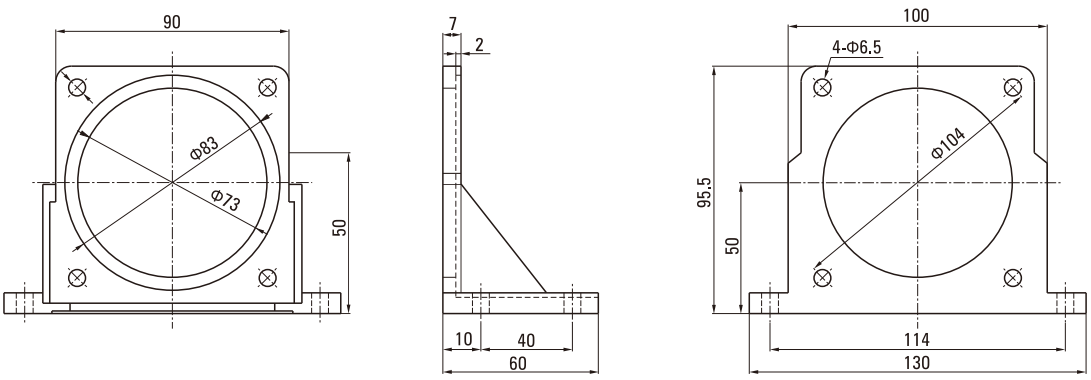

CATALOGUE

PLANETARY GEAR BOX
ZDR 行星减速器

中大力德

TRANSMISSION PLANETARY
传动行星减速电机

中大力德

AC & DC RIGHT ANGLE GEAR MOTOR
交、直流直角轴减速电动机

中大力德

PLANETARY GEAR BOX
ZB/ZBR/ZE/ZER/HD/HDR系列
高精度行星减速机

中大力德

SMALL AC GEAR MOTOR
小型交流齿轮减速电机

中大力德

PLANETARY GEAR BOX
ZDE/ZDF/ZDWE/ZDWF/ZDS系列
高精度行星减速机

中大力德

www.zd-motor.com ›››